VGN-S53B/S63PZ/S73PB/S93PS/S93PSY/S93S
VGN-S430P/S450FP/S460/S460F/S460P/S470P/S480/S480B/S480BH/S480P
VGN-S4HP/S4HRP/S4M/S4VP/S4XP/S4XRP/S4Z
VGN-S43LP/S44TP/S45C/S45CP/S45LP/S45SP/S46C/S46CP/S46GP/S46TP/S47LP/S47SP/S48CP/S48GP/S48TP/S49CP

SERVICE MANUAL

Ver. 7 2005K

Revision History

Area	Model	Lineup	
Japanese	Japanese	VGN-S53B/S	
		VGN-S63PZ/B	3 [MA]
		VGN-S73PB/B	
		VGN-S93PS/S*	
		VGN-S93PSY*	
		VGN-S93S/S*	
American	US Canadian	VGN-S430P/S	
		VGN-S460/B	
		VGN-S460P/B	
		VGN-S470P/S	
		VGN-S480*	
		VGN-S480B*	
		VGN-S480BH*	6 [MA]
		VGN-S480P*	
	Latin	VGN-S450FP	1 [MA]
		VGN-S460F	1 [MA]
European	AEP/UK	VGN-S4HP/B	1 [MA]
		VGN-S4HRP/B	1 [MA]
		VGN-S4M/S	1 [MA]
		VGN-S4VP/B	1 [MA]
		VGN-S4XP/B	1 [MA]
		VGN-S4XRP/B	1 [MA]
		VGN-S4Z/S	5 [MA]
Asian/Oceania/ South Africa	International	VGN-S43LP/S	5 [MA]
		VGN-S44TP/B	3 [MA]
		VGN-S45LP/S	5 [MA]
		VGN-S45SP/S	2 [MA]
		VGN-S46GP/S	2 [MA]
		VGN-S46TP/S	2 [MA]
		VGN-S47LP/B	5 [MA]
		VGN-S47SP/B	2 [MA]
		VGN-S48GP/B	2 [MA]
		VGN-S48TP/B	2 [MA]
	Chinese	VGN-S45C/S	2 [MA]
		VGN-S45CP/S	2 [MA]
		VGN-S46C/B	2 [MA]
		VGN-S46C/S	2 [MA]
		VGN-S46CP/B	2 [MA]
		VGN-S46CP/S	2 [MA]
		VGN-S48CP/B	2 [MA]
		VGN-S49CP/B	2 [MA]

* : CTO Model

9-876-417-07

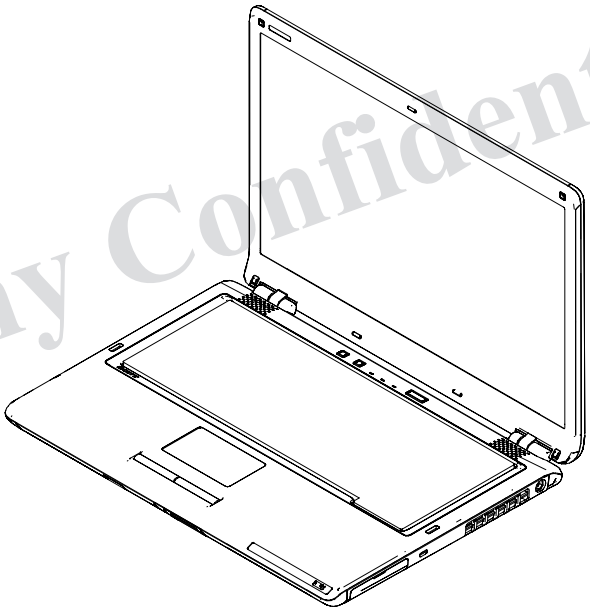

Sony Confidential

Bluetooth™

WiFi CERTIFIED

MEMORY STICK™

i.™ S400

VAIO

· Design and specifications are subject to change without notice.

· 本機の仕様および外観は、改良のため予告なく変更することがありますが、ご了承ください。

PERSONAL COMPUTER

SONY®

Information in this document is subject to change without notice.

Sony, VAIO and CLIE are trademarks or registered trademarks of Sony. Microsoft, Windows, Windows Media, Outlook, Bookshelf and other Microsoft products are trademarks or registered trademarks of Microsoft Corporation in the United States and other countries. The word Bluetooth and the Bluetooth logo are trademarks of Bluetooth SIG, Inc. AMD, AMD logo, AMD Duron and combinations there of, 3DNow!, are trademarks of Advanced Micro Devices, Inc. Intel Inside logo, Pentium and Celeron are trademarks or registered trademarks of Intel Corporation. Transmeta, the Transmeta logo, Crusoe Processor, the Crusoe logo and combinations there of are trademarks of Transmeta Corporation in the USA and other countries. Graffiti, HotSync, PalmModem, and Palm OS are registered trademarks, and the Hotsync logo and Palm are trademarks of Palm, Inc. or its subsidiaries. (M) and Motrola are trademarks of Motrora, Inc. Other Motrola products and services with (R) mark like Dragomball are the trademarks of Motrola, Inc.

All other names of systems, products and services in this manual are trademarks or registered trademarks of their respective owners. In this manual, the (TM) or (R) mark are not specified.

Caution Markings for Lithium/Ion Battery - The following or similar texts shall be provided on battery pack of equipment or in both the operating and the service instructions.

CAUTION: Danger of explosion if battery is incorrectly replaced. Replace only with the same or equivalent type recommended by the manufacturer. Discard used batteries according to the manufacturer's instructions.

CAUTION: The battery pack used in this device may present a fire or chemical burn hazard if mistreated. Do not disassemble, heat above 100°C (212°F) or incinerate. Dispose of used battery promptly. Keep away from children.

CAUTION: Changing the back up battery.

- Overcharging, short circuiting, reverse charging, multilati on or incineration of the cells must be avoided to prevent one or more of the following occurrences; release of toxic materials, release of hydrogen and/or oxygen gas, rise in surface temperature.
- If a cell has leaked or vented, it should be replaced immediately while avoiding to touch it without any protection.

Service and Inspection Precautions

1. Obey precautionary markings and instructions

Labels and stamps on the cabinet, chassis, and components identify are as requiring special precautions. Be sure to observe these precautions, as well as all precautions listed in the operating manual and other associated documents.

2. Use designated parts only

The set's components possess important safety characteristics, such as noncombustibility and the ability to tolerate large voltages. Be sure that replacement parts possess the same safety characteristics as the originals. Also remember that the ⚠ mark, which appears in circuit diagrams and parts lists, denotes components that have particularly important safety functions; be extra sure to use only the designated components.

3. Always follow the original design when mounting parts and routing wires

The original layout includes various safety features, such as inclusion of insulating materials (tubes and tape) and the mounting of parts above the printer board. In addition, internal wiring has been routed and clamped so as to keep it away from hot or high-voltage parts. When mounting parts or routing wires, therefore, be sure to duplicate the original layout.

4. Inspect after completing service

After servicing, inspect to make sure that all screws, components, and wiring have been returned to their original condition. Also check the area around the repair location to ensure that repair work has caused no damage, and confirm safety.

5. When replacing chip components...

Never reuse components. Also remember that the negative side of tantalum capacitors is easily damaged by heat.

6. When handling flexible print boards...

- The temperature of the soldering-iron tip should be about 270°C.
- Do not apply the tip more than three times to the same pattern.
- Handle patterns with care; never apply force.

Caution: Remember that hard disk drives are easily damaged by vibration. Always handle with care.

ATTENTION AU COMPOSANT AYANT RAPPORT À LA SÉCURITÉ!

LES COMPOSANTS IDENTIFÉS PAR UNE MARQUE ⚠ SUR LES DIAGRAMMES SCHÉMATIQUES ET LA LISTE DES PIÈCES SONT CRITIQUES POUR LA SÉCURITÉ DE FONCTIONNEMENT. NE REMPLACER CES COMPOSANTS QUE PAR DES PIÈSES SONY DONT LES NUMÉROS SONT DONNÉS DANSCE MANUEL OU DANS LES SUPPÉMENTS PUBLIÉS PAR SONY.

TABLE OF CONTENTS

Section Title Page

CHAPTER 1. SPECIFICATIONS
1-1. Specifications 1-1
(to 1-2)

CHAPTER 2. BLOCK DIAGRAM 2-1
(to 2-1)

CHAPTER 3. FRAME HARNESS DIAGRAM 3-1
(to 3-1)

CHAPTER 4. EXPLODED VIEWS AND PARTS LIST
Palmrest
P-1 4-2
Main Board
M-1 4-4
Bottom
B-1 4-6
LCD
L-1. 13.3-inch WXGA (Brighter) – Made by TO – 4-8
L-2. 13.3-inch WXGA (Brighter) – Made by SH – 4-10
L-3. 13.3-inch WXGA 4-12
Accessories
A-1 4-14
(to 4-14)

Section Title Page

CHAPTER 5. OTHERS
5-1. The Barcode Label 5-1
5-2. Replacing the CPU 5-2
(to 5-2)

History of the changes is shown as the "Revision History" at the end of this data.

変更履歴は,“Revision History”として,本データ末に記載してあります。

Sony Confidential

CHAPTER 1.
SPECIFICATIONS

1-1. Specifications

	J						AM		
Model	VGN-S73PB/B	VGN-S53B/S	VGN-S93PS/S*	VGN-S93PSY*	VGN-S93S/S*	VGN-S63PZ/B	VGN-S460P/B	VGN-S470P/S	VGN-S460/B
CPU	PM/Do/750/1.86GHz	PM/Do/730/1.60GHz	CelM/Do/360/1.40GHz or PM/Do/730/1.60GHz or PM/Do/750/1.86GHz or PM/Do/770/2.13GHz	CelM/Do/360/1.40GHz or PM/Do/730/1.60GHz or PM/Do/750/1.86GHz or PM/Do/770/2.13GHz	CelM/Do/360/1.40GHz or PM/Do/730/1.60GHz or PM/Do/750/1.86GHz or PM/Do/770/2.13GHz	PM/Do/730/1.60GHz	PM/Do/740/1.73GHz	PM/Do/740/1.73GHz	PM/Do/740/1.73GHz
Chipset	915PM	915GM	915GM or 915PM	915GM or 915PM	915GM or 915PM	915GM	915PM	915PM	915PM
Graphics	NV44M-V (TC32MB)	915GM Integrated	915GM Integrated or NV44M-V (TC32MB)	915GM Integrated or NV44M-V (TC32MB)	915GM Integrated or NV44M-V (TC32MB)	915GM Integrated	NV44M-V (TC32MB)	NV44M-V (TC32MB)	NV44M-V (TC32MB)
LCD	13.3/WXGA/BR	13.3/WXGA/BR	13.3/WXGA/BR or 13.3/WXGA	13.3/WXGA/BR or 13.3/WXGA	13.3/WXGA/BR or 13.3/WXGA	13.3/WXGA	13.3/WXGA/BR	13.3/WXGA/BR	13.3/WXGA/BR
HDD	80GB	60GB	100GB or 40GB or 60GB or 80GB	100GB or 40GB or 60GB or 80GB	100GB or 40GB or 60GB or 80GB	40GB	80GB	80GB	80GB
Memory Std	512MB(512MBx1)	256MB(256MBx1)	512MB(256MBx2) or 256MB(256MBx1) or 1GB(512MBx2) or 2GB(1GBx2)	512MB(256MBx2) or 256MB(256MBx1) or 1GB(512MBx2) or 2GB(1GBx2)	512MB(256MBx2) or 256MB(256MBx1) or 1GB(512MBx2) or 2GB(1GBx2)	512MB(256MBx2)	512MB(256MBx2)	512MB(512MBx1)	512MB(256MBx2)
Memory Max	2GB	2GB	2GB	2GB	2GB	2GB	2GB	2GB	2GB
Optical	SuperMulti/9.5/x4/+DL	SuperMulti/9.5/x4/+DL	Combo/9.5/x24 or SuperMulti/9.5/x4/+DL	Combo/9.5/x24 or SuperMulti/9.5/x4/+DL	Combo/9.5/x24 or SuperMulti/9.5/x4/+DL	Combo/9.5/x24	DVD+-RW/9.5/x4/+DL	DVD+-RW/9.5/x4/+DL	DVD+-RW/9.5/x4/+DL
Wireless LAN	802.11b/g	802.11b/g	802.11b/g	802.11b/g	802.11b/g	802.11b/g	802.11b/g	802.11b/g	802.11b/g
AC adaptor	VGP-AC19V11	VGP-AC19V11	VGP-AC19V11	VGP-AC19V11	VGP-AC19V11	VGP-AC19V11	VGP-AC19V10	VGP-AC19V10	VGP-AC19V10
Battery	VGP-BPS2	VGP-BPS2	VGP-BPS2 or VGP-BPL2	VGP-BPS2 or VGP-BPL2	VGP-BPS2 or VGP-BPL2	VGP-BPS2	VGP-BPS2	VGP-BPS2	VGP-BPS2
Bluetooth	×	×	×	×	×	×	×	×	×
OS	XP Pro	XP Home	XP Pro	XP Pro	XP Home	XP Pro	XP Pro	XP Pro	XP Home
Color Variation	Black	Silver	Silver	Silver	Silver	Black	Black	Silver	Black
Office	2003 Personal	2003 Personal	2003 Personal or 2003 Professional or None	2003 Personal or 2003 Professional or None	2003 Personal or 2003 Professional or None	None	None	None	None
Keyboard	Japanese	Japanese	English or Japanese	English or Japanese	English or Japanese	Japanese	English	English	English

3 [MA]

	AM							EU
Model	VGN-S480*	VGN-S480P*	VGN-S480B*	VGN-S480BH*	VGN-S430P/S	VGN-S460F	VGN-S450FP	VGN-S4XP/B
CPU	CelM/Do/360/1.40GHz or PM/Do/730/1.60GHz or PM/Do/740/1.73GHz or PM/Do/750/1.86GHz or PM/Do/760/2GHz or	CelM/Do/360/1.40GHz or PM/Do/730/1.60GHz or PM/Do/740/1.73GHz or PM/Do/750/1.86GHz or PM/Do/760/2GHz or PM/Do/770/2.13GHz	CelM/Do/360/1.40GHz or PM/Do/730/1.60GHz or PM/Do/740/1.73GHz or PM/Do/750/1.86GHz or PM/Do/760/2GHz or PM/Do/770/2.13GHz	CelM/Do/360/1.40GHz or PM/Do/730/1.60GHz or PM/Do/740/1.73GHz or PM/Do/750/1.86GHz or PM/Do/760/2GHz or PM/Do/770/2.13GHz	PM/Do/730/1.60GHz	PM/Do/740/1.73GHz	PM/Do/730/1.60GHz	PM/Do/760/2GHz
Chipset	915GM or 915PM	915GM or 915PM	915GM or 915PM	915GM or 915PM	915GM	915GM	915GM	915PM
Graphics	915GM Integrated or NV44M-V (TC32MB)	915GM Integrated or NV44M-V (TC32MB)	915GM Integrated or NV44M-V (TC32MB)	915GM Integrated or NV44M-V (TC32MB)	915GM Integrated	915GM Integrated	915GM Integrated	NV44M-V (TC32MB)
LCD	13.3/WXGA/BR or 13.3/WXGA	13.3/WXGA/BR or 13.3/WXGA	13.3/WXGA/BR or 13.3/WXGA	13.3/WXGA/BR or 13.3/WXGA	13.3/WXGA/BR	13.3/WXGA/BR	13.3/WXGA/BR	13.3/WXGA/BR
HDD	100GB or 40GB or 60GB or 80GB	100GB or 40GB or 60GB or 80GB	100GB or 40GB or 60GB or 80GB	100GB or 40GB or 60GB or 80GB	60GB	60GB	40GB	100GB
Memory Std	512MB(256MBx2) or 512MB(512MBx1) or 256MB(256MBx1) or 1GB(512MBx2) or 2GB(1GBx2) or 1GB(1GBx1)	512MB(256MBx2) or 512MB(512MBx1) or 256MB(256MBx1) or 1GB(512MBx2) or 2GB(1GBx2) or 1GB(1GBx1)	512MB(256MBx2) or 512MB(512MBx1) or 256MB(256MBx1) or 1GB(512MBx2) or 2GB(1GBx2) or 1GB(1GBx1)	512MB(256MBx2) or 512MB(512MBx1) or 256MB(256MBx1) or 1GB(512MBx2) or 2GB(1GBx2) or 1GB(1GBx1)	512MB(512MBx1)	512MB(256MBx2)	512MB(256MBx2)	1GB(512MBx2)
Memory Max	2GB	2GB	2GB	2GB	2GB	2GB	2GB	2GB
Optical	Combo/9.5/x24 or DVD+-RW/9.5/x4/+DL	Combo/9.5/x24 or DVD+-RW/9.5/x4/+DL	Combo/9.5/x24 or DVD+-RW/9.5/x4/+DL	Combo/9.5/x24 or DVD+-RW/9.5/x4/+DL	Combo/9.5/x24	DVD+-RW/9.5/x4/+DL	Combo/9.5/x24	DVD+-RW/9.5/x4/+DL
Wireless LAN	802.11a/b/g or 802.11b/g	802.11a/b/g or 802.11b/g	802.11a/b/g or 802.11b/g	802.11a/b/g or 802.11b/g	802.11b/g	802.11b/g	802.11b/g	802.11b/g
AC adaptor	VGP-AC19V10	VGP-AC19V10	VGP-AC19V10	VGP-AC19V10	VGP-AC19V10	VGP-AC19V10	VGP-AC19V10	VGP-AC19V10
Battery	VGP-BPS2 or VGP-BPL2	VGP-BPS2 or VGP-BPL2	VGP-BPS2 or VGP-BPL2	VGP-BPS2 or VGP-BPL2	VGP-BPS2	VGP-BPS2	VGP-BPS2	VGP-BPS2
Bluetooth	O or ×	O or ×	O or ×	O or ×	×	×	×	O
OS	XP Home	XP Pro	XP Pro	XP Home	XP Pro	XP Home	XP Pro	XP Pro
Color Variation	Black	Black	Black	Black	Silver	Black	Black	Black
Office	CTO	CTO	CTO	CTO	None	None	None	None
Keyboard	English	English	English	English	English	Latin	Latin	Each Language

6 [MA] 1 [MA] 1 [MA] 1 [MA]

・The trademarks of registered trademarks of above table, refer to page 2.
・The model that is accompanied by asterisk (*) is the CTO model.
・本表中の商標・登録商標については，2ページをご参照ください。
・機種名に（*）がつくものはCTOモデルです。

Sony Confidential

	EU						AO	
Model	VGN-S4VP/B	VGN-S4HP/B	VGN-S4HRP/B	VGN-S4M/S	VGN-S4XRP/B	VGN-S4Z/S	VGN-S49CP/B	VGN-S48CP/B
CPU	PM/Do/750/1.86GHz	PM/Do/740/1.73GHz	PM/Do/740/1.73GHz	PM/Do/730/1.60GHz	PM/Do/760/2GHz	PM/Do/740/1.73GHz	PM/Do/770/2.13GHz	PM/Do/750/1.86GHz
Chipset	915PM	915PM	915PM	915PM	915PM	915PM	915PM	915PM
Graphics	NV44M-V (TC32MB)	NV44M-V (TC32MB)	NV44M-V (TC32MB)	NV44M-V (TC32MB)	NV44M-V (TC32MB)	NV44M-V (TC32MB)	NV44M-V (TC32MB)	NV44M-V (TC32MB)
LCD	13.3/WXGA/BR	13.3/WXGA/BR	13.3/WXGA/BR	13.3/WXGA/BR	13.3/WXGA/BR	13.3/WXGA/BR	13.3/WXGA/BR	13.3/WXGA/BR
HDD	80GB	60GB	60GB	60GB	100GB	80GB	60GB	60GB
Memory Std	1GB(512MBx2)	512MB(512MBx1)	512MB(512MBx1)	512MB(256MBx2)	1GB(512MBx2)	512MB(256MBx2)	512MB(512MBx1)	512MB(512MBx1)
Memory Max	2GB	2GB	2GB	2GB	2GB	2GB	2GB	2GB
Optical	DVD+-RW/9.5/x4/+DL	DVD+-RW/9.5/x4/+DL	DVD+-RW/9.5/x4/+DL	DVD+-RW/9.5/x4/+DL	DVD+-RW/9.5/x4/+DL	DVD+-RW/9.5/x4/+DL	DVD+-RW/9.5/x4/+DL	DVD+-RW/9.5/x4/+DL
Wireless LAN	802.11b/g	802.11b/g	802.11b/g	802.11b/g	802.11b/g	802.11b/g	802.11b/g	802.11b/g
AC adaptor	VGP-AC19V10	VGP-AC19V10	VGP-AC19V12	VGP-AC19V10	VGP-AC19V12	VGP-AC19V10	VGP-AC19V10	VGP-AC19V10
Battery	VGP-BPS2	VGP-BPS2	VGP-BPS2	VGP-BPS2	VGP-BPS2	VGP-BPS2	VGP-BPS2	VGP-BPS2
Bluetooth	○	○	×	×	×	×	○	○
OS	XP Pro	XP Pro	XP Pro	XP Home	XP Pro	XP Home	XP Pro	XP Pro
Color Variation	Black	Black	Black	Silver	Black	Silver	Black	Black
Office	None	None	None	None	None	None	None	None
Keyboard	Each Language	Each Language	Russian	Each Language	Russian	English	English	English
	1 [MA]	1 [MA]	1 [MA]	1 [MA]	1 [MA]	5 [MA]	2 [MA]	2 [MA]

	AO							
Model	VGN-S46CP/B	VGN-S46CP/S	VGN-S46C/B	VGN-S46C/S	VGN-S45CP/S	VGN-S45C/S	VGN-S48GP/B	VGN-S48TP/B
CPU	PM/Do/740/1.73GHz	PM/Do/740/1.73GHz	PM/Do/740/1.73GHz	PM/Do/740/1.73GHz	PM/Do/730/1.60GHz	PM/Do/730/1.60GHz	PM/Do/760/2GHz	PM/Do/760/2GHz
Chipset	915PM	915PM	915PM	915PM	915GM	915GM	915PM	915PM
Graphics	NV44M-V (TC32MB)	NV44M-V (TC32MB)	NV44M-V (TC32MB)	NV44M-V (TC32MB)	915GM Integrated	915GM Integrated	NV44M-V (TC32MB)	NV44M-V (TC32MB)
LCD	13.3/WXGA/BR	13.3/WXGA/BR	13.3/WXGA/BR	13.3/WXGA/BR	13.3/WXGA/BR	13.3/WXGA/BR	13.3/WXGA/BR	13.3/WXGA/BR
HDD	40GB	40GB	40GB	40GB	40GB	40GB	60GB	60GB
Memory Std	512MB(512MBx1)	512MB(512MBx1)	512MB(512MBx1)	512MB(512MBx1)	256MB(256MBx1)	256MB(256MBx1)	512MB(512MBx1)	512MB(512MBx1)
Memory Max	2GB	2GB	2GB	2GB	2GB	2GB	2GB	2GB
Optical	Combo/9.5/x24	Combo/9.5/x24	Combo/9.5/x24	Combo/9.5/x24	Combo/9.5/x24	Combo/9.5/x24	DVD+-RW/9.5/x4/+DL	DVD+-RW/9.5/x4/+DL
Wireless LAN	802.11b/g	802.11b/g	802.11b/g	802.11b/g	802.11b/g	802.11b/g	802.11b/g	802.11b/g
AC adaptor	VGP-AC19V10	VGP-AC19V10	VGP-AC19V10	VGP-AC19V10	VGP-AC19V10	VGP-AC19V10	VGP-AC19V10	VGP-AC19V10
Battery	VGP-BPS2	VGP-BPS2	VGP-BPS2	VGP-BPS2	VGP-BPS2	VGP-BPS2	VGP-BPS2	VGP-BPS2
Bluetooth	○	○	○	○	○	○	○	○
OS	XP Pro	XP Pro	XP Home	XP Home	XP Pro	XP Home	XP Pro	XP Pro
Color Variation	Black	Silver	Black	Silver	Silver	Silver	Black	Black
Office	None	None	None	None	None	None	None	None
Keyboard	English	English	English	English	English	English	English	Taiwan
	2 [MA]	2 [MA]	2 [MA]	2 [MA]	2 [MA]	2 [MA]	2 [MA]	2 [MA]

	AO							
Model	VGN-S47SP/B	VGN-S47LP/B	VGN-S46GP/S	VGN-S46TP/S	VGN-S45SP/S	VGN-S45LP/S	VGN-S44TP/B	VGN-S43LP/S
CPU	PM/Do/760/2GHz	PM/Do/760/2GHz	PM/Do/740/1.73GHz	PM/Do/740/1.73GHz	PM/Do/740/1.73GHz	PM/Do/740/1.73GHz	PM/Do/740/1.73GHz	PM/Do/740/1.73GHz
Chipset	915PM	915PM	915PM	915PM	915PM	915PM	915PM	915PM
Graphics	NV44M-V (TC32MB)	NV44M-V (TC32MB)	NV44M-V (TC32MB)	NV44M-V (TC32MB)	NV44M-V (TC32MB)	NV44M-V (TC32MB)	NV44M-V (TC32MB)	NV44M-V (TC32MB)
LCD	13.3/WXGA/BR	13.3/WXGA/BR	13.3/WXGA/BR	13.3/WXGA/BR	13.3/WXGA/BR	13.3/WXGA/BR	13.3/WXGA/BR	13.3/WXGA/BR
HDD	60GB	60GB	60GB	60GB	60GB	60GB	40GB	40GB
Memory Std	512MB(512MBx1)	512MB(512MBx1)	512MB(512MBx1)	512MB(512MBx1)	512MB(512MBx1)	512MB(512MBx1)	512MB(512MBx1)	512MB(512MBx1)
Memory Max	2GB	2GB	2GB	2GB	2GB	2GB	2GB	2GB
Optical	DVD+-RW/9.5/x4/+DL	DVD+-RW/9.5/x4/+DL	DVD+-RW/9.5/x4/+DL	DVD+-RW/9.5/x4/+DL	DVD+-RW/9.5/x4/+DL	DVD+-RW/9.5/x4/+DL	Combo/9.5/x24	Combo/9.5/x24
Wireless LAN	802.11b/g	802.11b/g	802.11b/g	802.11b/g	802.11b/g	802.11b/g	802.11b/g	802.11b/g
AC adaptor	VGP-AC19V10	VGP-AC19V10	VGP-AC19V10	VGP-AC19V10	VGP-AC19V10	VGP-AC19V10	VGP-AC19V10	VGP-AC19V10
Battery	VGP-BPS2	VGP-BPS2	VGP-BPS2	VGP-BPS2	VGP-BPS2	VGP-BPS2	VGP-BPS2	VGP-BPS2
Bluetooth	×	×	○	○	×	×	○	×
OS	XP Pro	XP Pro	XP Pro	XP Pro	XP Pro	XP Pro	XP Pro	XP Pro
Color Variation	Black	Black	Silver	Silver	Silver	Silver	Black	Silver
Office	None	None	None	None	None	None	None	None
Keyboard	Thai	Korean	English	Taiwan	Thai	Korean	Taiwan	Korean
	2 [MA]	5 [MA]	2 [MA]	2 [MA]	2 [MA]	5 [MA]	3 [MA]	5 [MA]

・The trademarks of registered trademarks of above table, refer to page 2.

・本表中の商標・登録商標については，2ページをご参照ください。

1 [MA]

Sony Confidential

CHAPTER 2.
BLOCK DIAGRAM

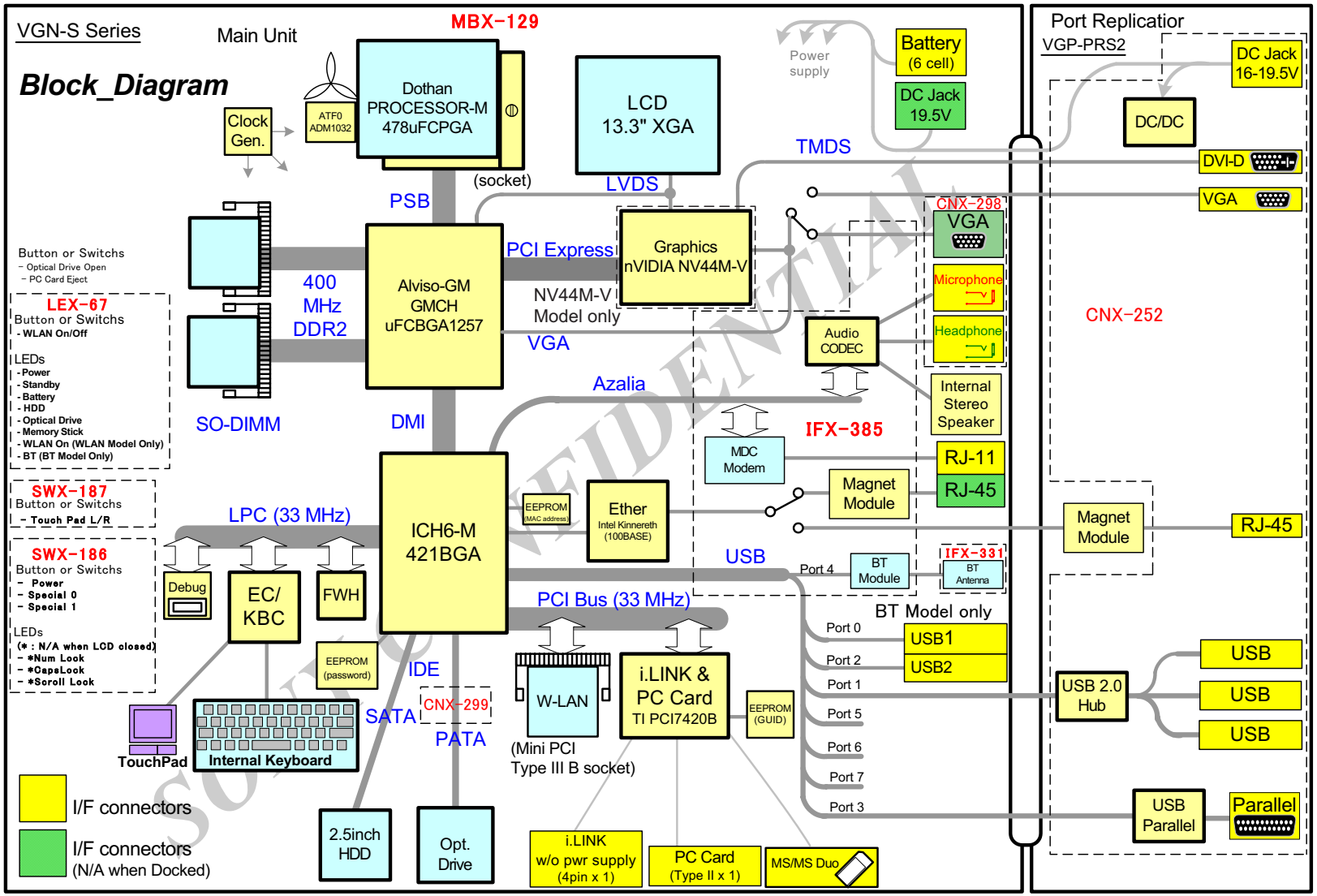

SONY CONFIDENTIAL

Sony Confidential

CHAPTER 3.
FRAME HARNESS DIAGRAM

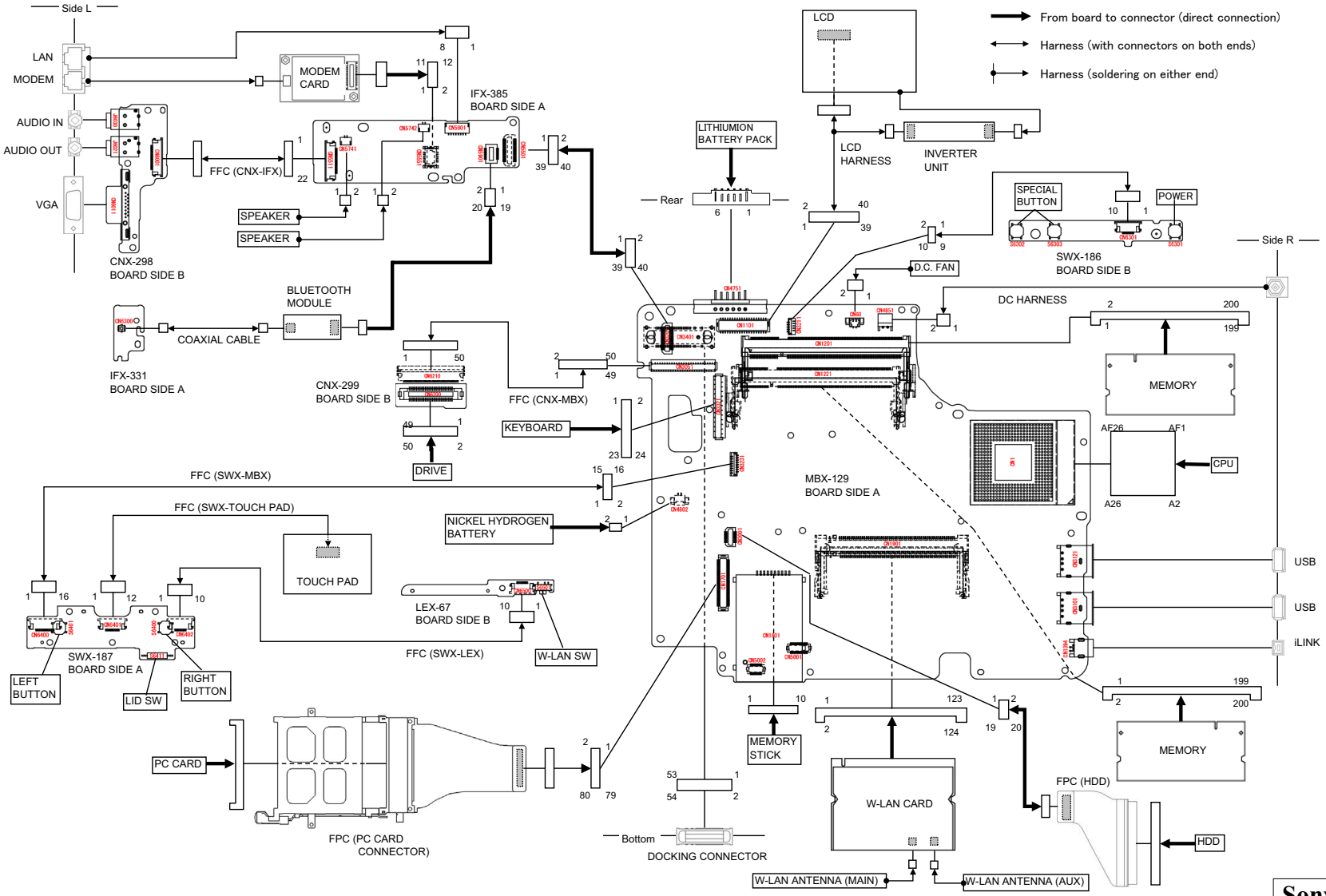

Sony Confidential

VGN-S53B/S63PZ/S73PB/S93PS/S93PSY/S93S (J)
VGN-S430P/S450FP/S460/S460F/S460P/S470P/S480/S480B/S480BH/S480P (AM)
VGN-S4HP/S4HRP/S4M/S4VP/S4XP/S4XRP/S4Z (EU)
VGN-S43LP/S44TP/S45C/S45CP/S45LP/S45SP/S46C/S46CP/S46GP/S46TP/S47LP/S47SP/S48CP/S48GP/S48TP/S49CP (AO)

(END)

CHAPTER 4.
EXPLODED VIEWS AND PARTS LIST

- The parts list is compiled by blocks of a palmrest and bottom etc. The sections of the parts list are different depending on the model. Please refer to list of contents shown in the below.

- 分解図と部品表は，パームレスト，ボトムなどのブロックごとに分かれています。機種によって部品表のセクションが異なりますので，詳細は右下の一覧表を参照してください。

Section Page

Palmrest
P-1 4-2
Main Board
M-1 4-4
Bottom
B-1 4-6
LCD
L-1. 13.3-inch WXGA (Brighter) – Made by TO – 4-8
L-2. 13.3-inch WXGA (Brighter) – Made by SH – 4-10
L-3. 13.3-inch WXGA 4-12
Accessory
A-1 4-14

NOTE:

- Items marked "*" are not stocked since they are seldom required for routine service. Some delay should be anticipated when ordering these items.
- The mechanical parts with no reference number in the exploded views are not supplied.
- When two or more parts are shown, use the part described first as the main part.
- The parts marked " $ " are the High Value Modules (HVM).
- The parts marked " # " are the parts on which barcode label is attached. For the barcode label, refer to CHAPTER 5.
- The parts marked "&" are the "Customer Replacable Parts (CRP)" that can be replaced by Field Customer Support. Especially the parts with the <&> mark require the special attention to use them. Here fore, check first whether the desired part is one of the targetted parts of the Customer Replaceable Parts (CRP), or the non-targetted parts by referring to the exploded view.

【使用上の注意】

- *印の部品は常備在庫しておりません。
- 図面番号のない部品は供給しません。
- 併記部品の場合，上部記載部品をメイン部品として使用してください。
- 部品名称の前に$印のついた部品は，High Value Module（HVM）です。
- 商品名称の前に#印のついた部品は，バーコードラベル貼付部品です。
  バーコードラベルについてはCHAPTER 5を参照してください。
- 部品名称の前に&印のついた部品は，お客様窓口などでも交換可能なCustomer Replacable Part（CRP）です。
  特に<&>のついた部品は，使い分けが必要な部品ですので，分解図でCustomer Replacable Parts対象部品か，対象外部品かを必ず御確認ください。

The components identified by mark ⚠ or dotted line with mark ⚠ are critical for safety. Replace only with part number specified.

Les composants identifiés par une marque ⚠ sont critiques pour la sécurité. Ne les remplacer que par une pièce portant le numéro spécifié.

⚠印の部品，または⚠印付きの点線で囲まれた部品は，安全性を維持するために重要な部品です。従って交換時は，必ず指定の部品を使用して下さい。

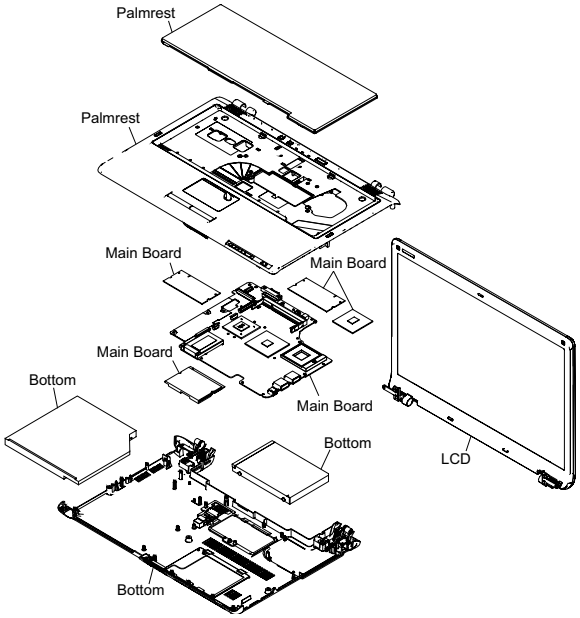

			Palmrest	Main Board	Bottom	LCD	Accessory
	J	S73PB/B	P-1	M-1	B-1	L-1	A-1
	J	S53B/S	P-1	M-1	B-1	L-1	A-1
	J	S93PS/S*	P-1	M-1	B-1	L-1, 3	A-1
	J	S93PSY*	P-1	M-1	B-1	L-1, 3	A-1
	J	S93S/S*	P-1	M-1	B-1	L-1, 3	A-1
⚠3 [MA]	J	S63PZ/B	P-1	M-1	B-1	L-3	A-1
	AM	S460P/B	P-1	M-1	B-1	L-1	A-1
	AM	S470P/S	P-1	M-1	B-1	L-1	A-1
	AM	S460/B	P-1	M-1	B-1	L-1	A-1
	AM	S480*	P-1	M-1	B-1	L-2, 3	A-1
	AM	S480P*	P-1	M-1	B-1	L-2, 3	A-1
	AM	S480B*	P-1	M-1	B-1	L-2, 3	A-1
⚠6 [MA]	AM	S480BH*	P-1	M-1	B-1	L-1, 3	A-1
	AM	S430P/S	P-1	M-1	B-1	L-2	A-1
⚠1 [MA]	AM	S460F	P-1	M-1	B-1	L-2	A-1
⚠1 [MA]	AM	S450FP	P-1	M-1	B-1	L-2	A-1
⚠1 [MA]	EU	S4XP/B	P-1	M-1	B-1	L-2	A-1
⚠1 [MA]	EU	S4VP/B	P-1	M-1	B-1	L-2	A-1
⚠1 [MA]	EU	S4HP/B	P-1	M-1	B-1	L-2	A-1
⚠1 [MA]	EU	S4HRP/B	P-1	M-1	B-1	L-2	A-1
⚠1 [MA]	EU	S4M/S	P-1	M-1	B-1	L-2	A-1
⚠1 [MA]	EU	S4XRP/B	P-1	M-1	B-1	L-2	A-1
⚠5 [MA]	EU	S4Z/S	P-1	M-1	B-1	L-2	A-1
⚠2 [MA]	AO	S49CP/B	P-1	M-1	B-1	L-1	A-1
⚠2 [MA]	AO	S48CP/B	P-1	M-1	B-1	L-1	A-1
⚠2 [MA]	AO	S46CP/B	P-1	M-1	B-1	L-1	A-1
⚠2 [MA]	AO	S46CP/S	P-1	M-1	B-1	L-1	A-1
⚠2 [MA]	AO	S46C/B	P-1	M-1	B-1	L-1	A-1
⚠2 [MA]	AO	S46C/S	P-1	M-1	B-1	L-1	A-1
⚠2 [MA]	AO	S45CP/S	P-1	M-1	B-1	L-1	A-1
⚠2 [MA]	AO	S45C/S	P-1	M-1	B-1	L-1	A-1
⚠2 [MA]	AO	S48GP/B	P-1	M-1	B-1	L-1	A-1
⚠2 [MA]	AO	S48TP/B	P-1	M-1	B-1	L-1	A-1
⚠2 [MA]	AO	S47SP/B	P-1	M-1	B-1	L-2	A-1
⚠5 [MA]	AO	S47LP/B	P-1	M-1	B-1	L-1	A-1
⚠2 [MA]	AO	S46GP/S	P-1	M-1	B-1	L-1	A-1
⚠2 [MA]	AO	S46TP/S	P-1	M-1	B-1	L-1	A-1
⚠2 [MA]	AO	S45SP/S	P-1	M-1	B-1	L-2	A-1
⚠5 [MA]	AO	S45LP/S	P-1	M-1	B-1	L-1	A-1
⚠3 [MA]	AO	S44TP/B	P-1	M-1	B-1	L-1	A-1
⚠5 [MA]	AO	S43LP/S	P-1	M-1	B-1	L-1	A-1

* : CTO model

Sony Confidential

VGN-S53B/S63PZ/S73PB/S93PS/S93PSY/S93S (J)
VGN-S430P/S450FP/S460/S460F/S460P/S470P/S480/S480B/S480BH/S480P (AM)
VGN-S4HP/S4HRP/S4M/S4VP/S4XP/S4XRP/S4Z (EU)
VGN-S43LP/S44TP/S45C/S45CP/S45LP/S45SP/S46C/S46CP/S46GP/S46TP/S47LP/S47SP/S48CP/S48GP/S48TP/S49CP (AO)

P-1. Palmrest

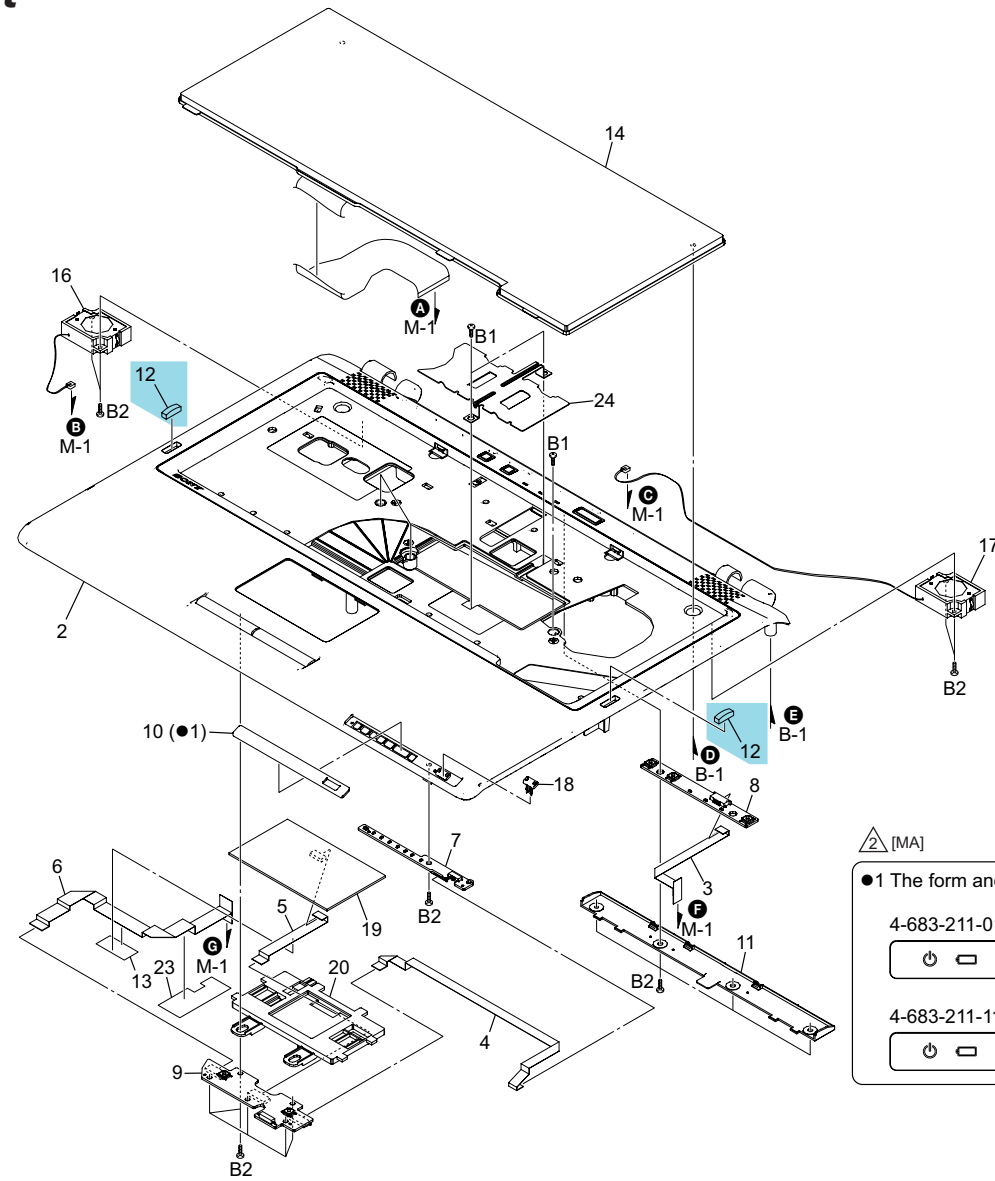

2 [MA]

●1 The form and the printing of LED cover differs for every part number.

4-683-211-01/4-683-211-21 COVER LED

4-683-211-11/4-683-211-31 COVER LED

Sony Confidential

P-1. Palmrest

Ref. No.	Part No.		Description
3	1-830-252-12		CABLE, FLEXIBLE FLAT (10PIN)
4	1-830-252-41		CABLE, FLEXIBLE FLAT (10PIN)
5	1-829-195-11		CABLE, FLEXIBLE FLAT (12PIN)
6	1-830-252-21		CABLE, FLEXIBLE FLAT (16PIN)
7	A-1124-115-A	$	COMPLETE PWB LEX67 (S)
8	~~A-1124-117-A~~	$	COMPLETE PWB SWX186 (S)
9	~~A-1124-116-A~~	$	COMPLETE PWB SWX187 (S)
11	4-683-212-01		COVER PALM
13	4-662-881-02		CUSHION, KEY BOARD
16	1-825-846-31		SPEAKER WITH BOX (L)
17	1-825-846-41		SPEAKER WITH BOX (R)
18	4-683-214-02		SWITCH WL
20	X-4626-773-2		ASSY HOLDER TP
23	2-592-270-01		SHEET FFC
24	2-548-550-01		SHIELD MEMORY PLATE
B1	4-672-834-71		SCREW, +B EG GRIP
B2	4-676-936-01		+SCREW,O2 +SPECIAL HEAD SELF S

△4 [COR] A-1124-116-A (→ 8)

△4 [COR] A-1124-117-A (→ 9)

					J						AM										EU							AO																	
	Ref.No.	Part No.		Description	S73PB/B	S53B/S	S93PS/S*	S93PSY*	S93S/S*	S63PZ/B	S460P/B	S470P/S	S460/B	S480*	S480P*	S480B*	S480BH*	S430P/S	S460F	S450FP	S4XP/B	S4VP/B	S4HP/B	S4HRP/B	S4M/S	S4XRP/B	S4Z/S	S49CP/B	S48CP/B	S46CP/B	S46CP/S	S46C/B	S46C/S	S45CP/S	S45C/S	S48GP/B	S48TP/B	S47SP/B	S47LP/B	S46GP/S	S46TP/S	S45SP/S	S45LP/S	S44TP/B	S43LP/S
	2	X-2025-555-2		ASSY PALMREST	●					●	●		●	●	●	●	●		●	●	●	●	●	●		●		●	●	●		●				●	●	●	●					●	
		X-2048-845-2		ASSY PALMREST(SILVER)		●	●	●	●			●						●							●		●				●		●	●	●					●	●	●	●		●
	10	4-683-211-31		COVER LED		●	●	●	●			●						●							●		●															●	●		●
		4-683-211-01		COVER LED										●	●	●	●				●	●	●					●	●	●		●				●	●							●	
		4-683-211-11		COVER LED	●					●	●		●	●	●	●	●		●	●				●		●												●	●						
△2 [MA]		4-683-211-21		COVER LED																											●		●	●	●					●	●					
	12	4-654-440-22	&	CUSHION (PALM)	●					●	●		●	●	●	●	●		●	●	●	●	●	●		●		●	●	●		●				●	●	●	●					●	
		4-654-440-41	&	CUSHION (PALM)		●	●	●	●			●						●							●		●				●		●	●	●					●	●	●	●		●
△1 [MA]	14	1-479-169-31	#	(Swiss)...KEYBOARD UNIT(CH)																	●		●																						
△1 [MA]		1-479-169-21	#	(German)...KEYBOARD UNIT(DE)																	●	●	●		●																				
△1 [MA]		1-479-169-61	#	(Spanish)...KEYBOARD UNIT(ES)																	●		●		●																				
△1 [MA]		1-479-169-41	#	(French/Belgium)...KEYBOARD UNIT(FR)																	●	●	●		●																				
△1 [MA]		1-479-169-11	#	(UK/Dutch)...KEYBOARD UNIT(GB)																	●	●	●		●		●																		
△1 [MA]		1-479-169-51	#	(Italian)...KEYBOARD UNIT(IT)																	●	●	●		●																				
		1-479-166-11	#	KEYBOARD UNIT(JP)	●	●	●	●	●	●																																			
△5 [MA]		1-479-166-31	#	KEYBOARD UNIT(KR)																																				●				●		●
△1 [MA]		1-479-169-91	#	(Portugal)...KEYBOARD UNIT(PT)																			●																						
△1 [MA]		1-479-169-81	#	(Swedish)...KEYBOARD UNIT(SE)																			●																						
△2 [MA]		1-479-166-41	#	KEYBOARD UNIT(TH)																																		●				●			
△2 [MA]		1-479-166-51	#	KEYBOARD UNIT(TW)																																	●				●			●	
		1-479-166-21	#	KEYBOARD UNIT(US)			●	●	●		●	●	●	●	●	●	●	●										●	●	●	●	●	●	●	●	●				●					
△1 [MA]		1-479-169-71	#	KEYBOARD UNIT (LA)															●	●																									
△1 [MA]		1-479-166-61	#	(Russian)...KEYBOARD UNIT (RU)																				●		●																			
	19	1-796-958-11		TOUCH PAD	●					●	●		●	●	●	●	●		●	●	●	●	●	●		●		●	●	●		●				●	●	●	●					●	
		1-796-958-31		TOUCH PAD		●	●	●	●			●						●							●		●				●		●	●	●					●	●	●	●		●
										△3 [MA]							△6 [MA]		△1 [MA]	△1 [MA]	△1 [MA]	△1 [MA]	△1 [MA]	△1 [MA]	△1 [MA]	△1 [MA]	△5 [MA]	△2 [MA]	△2 [MA]	△2 [MA]	△2 [MA]	△2 [MA]	△2 [MA]	△2 [MA]	△2 [MA]	△2 [MA]	△2 [MA]	△2 [MA]	△5 [MA]	△2 [MA]	△2 [MA]	△2 [MA]	△5 [MA]	△3 [MA]	△5 [MA]

- This parts list contains two different types of parts.
  The first type is the parts that are common to all models.
  The other type is the parts that are different depending on each model.

- この部品表は，機種共通の部品と，機種によって使い分けが必要な部品に分かれています。

Sony Confidential

M-1.Main Board

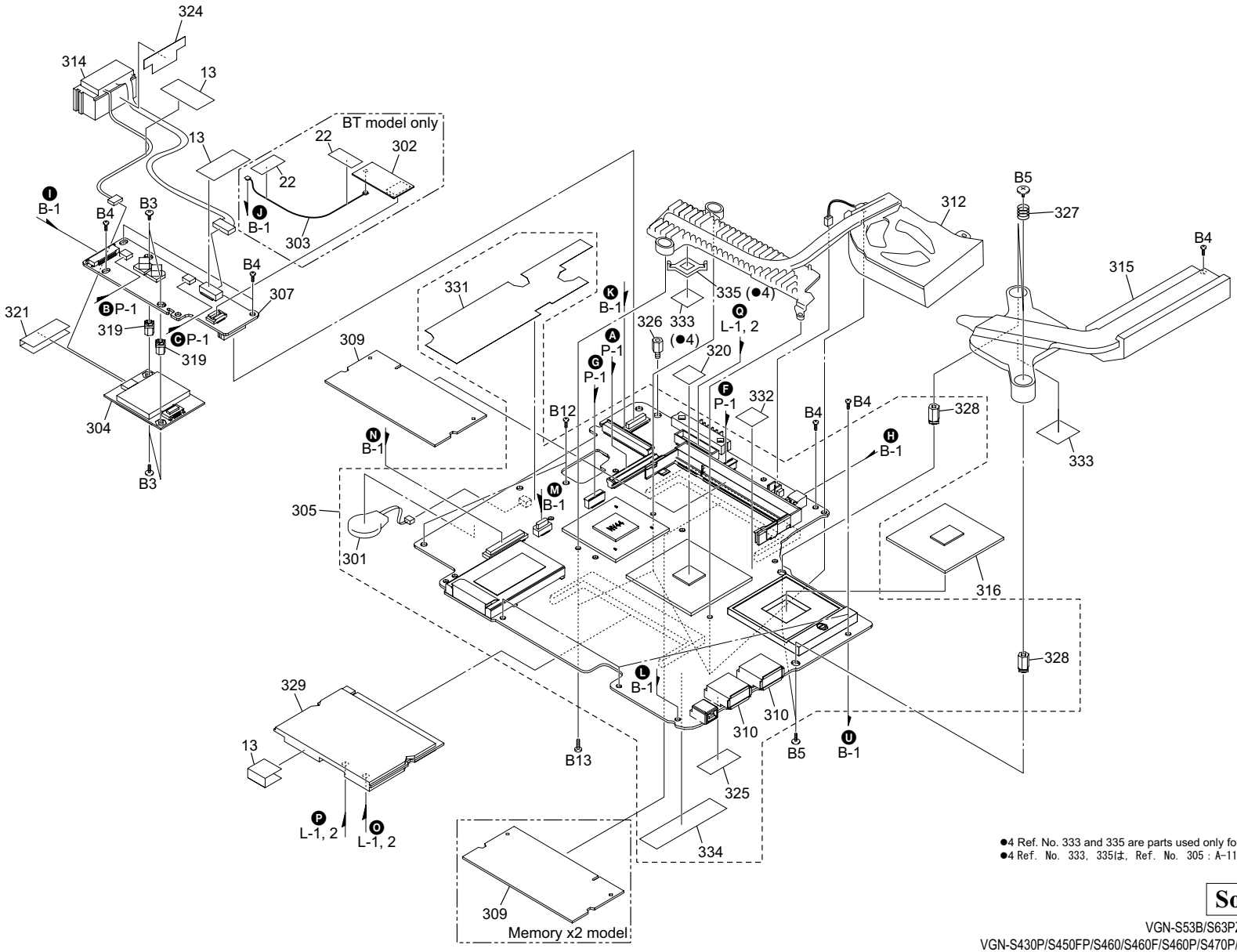

●4 Ref. No. 333 and 335 are parts used only for Ref. No. 305: A-1124-111-A.
●4 Ref. No. 333, 335は, Ref. No. 305 : A-1124-111-Aのみに使用する部品です。

Sony Confidential

M-1.Main Board

Ref. No.	Part No.		Description
13	4-662-881-02		CUSHION, KEY BOARD
22	4-672-493-01		COVER (SC)
301	1-756-544-11		LITHIUM RECHARGEABLE BATTERY
304	1-417-539-12	#	CARD, MODEM
307	A-1124-114-A	$	COMPLETE PWB IFX385 (S)
310	1-794-548-21		CONNECTOR, USB(A)
312	1-787-301-11		FAN,DC(5V)
314	1-962-758-21		HARNESS ,RJ-45/21
315	2-580-414-01		HEATSINK UNIT
319	4-655-326-01		OFF, STAND
320	2-580-415-01		SHEET THERMAL
321	2-059-468-02		SHEET MDC
324	2-109-080-02		SHEET RJ-CON
325	2-059-469-02		SHEET USB
326	4-651-989-51		SPACER (MBX)
327	2-102-944-01		SPRING HEATSINK
328	2-050-130-01		STAND (OFF)
331	2-580-891-01		SHEET MBX-OPT
333	2-580-416-01		SHEET PHASE CHANGE
334	2-580-397-01		SHEET BOTTOM 2
B3	4-672-836-01		SCREW, M2 SPECIAL HEAD,EG GRIP
B4	4-672-834-51		SCREW, +B EG GRIP
B5	2-050-159-01		M2 SPECIAL HEAD D7,T1
B12	4-654-387-01		SCREW (MBX)
B13	4-672-834-91		SCREW, +B EG GRIP

				J					AM										EU								AO																									
	Ref.No.	Part No.		Description	S73PB/B	S53B/S	S93PS/S+	S93PSY+	S93S/S+	S63PZ/B	S460P/B	S470P/S	S460/B	S450+	S450P+	S480B+	S480BH+	S430P/S	S460F	S460P	S470P	S4VP/B	S4HP/B	S4HRP/B	S4M/S	S4XRP/B	S4Z/S	S46CP/B	S46CP/B	S46CP/B	S46C/B	S46C/S	S46CP/S	S46C/S	S46GP/B	S46TP/B	S47SP/B	S47LP/B	S46GP/S	S46TP/S	S45SP/S	S45LP/S	S44TP/B	S43LP/S
	302	1-805-554-21		BLUETOOTH MODULE											●	●	●					●	●	●				●	●	●	●	●	●	●	●	●				●	●			●					
	303	1-829-369-11		CABLE, COAXIAL (WITH U.F.L CON)											●	●	●					●	●	●				●	●	●	●	●	●	●	●					●	●			●					
	305	A-1124-110-A	$	COMPLETE MBX-129 (EXT) (S)	●		●	●	●		●	●	●		●	●	●					●	●	●	●	●	●	●	●	●	●	●		●	●	●	●	●	●	●	●	●	●	●	●	●	●	●	●
		A-1124-111-A	$	COMPLETE PWB MBX-129 (INT) (S)		●	●	●	●	●					●	●	●	●	●	●												●	●																
	309	6-707-355-01	#	IC EBE52UD6ABSA-4A-E	●		●	●	●			●						●																●	●	●	●	●	●	●	●	●	●	●	●	●	●	●	●
		6-707-554-01	#	IC HYS64T128021HDL-5-A			●	●	●					●	●	●																																	
		6-707-352-01	#	IC HYS64T128021HDL-5-A			●	●	●					●	●	●	●		●	●						●						●	●																
△ [MA]		6-708-150-01	#	IC MT8HTF6464HDY-667E3																		●	●	●	●																								
		6-708-087-01	#	IC M470T3354BZ0-CC5							●															●																								
		6-707-350-01	#	IC HYS64T64020HDL-5-A					●						●	●	●											●	●	●	●	●																	
	316	6-707-252-01		IC RH80536GE0252MSL86G		●	●	●	●						●	●	●	●		●													●	●															
		6-707-258-01		IC RH80536GE0302MSL7SA							●	●	●		●	●	●	●						●	●			●		●	●	●	●							●	●	●	●	●	●				
		6-707-259-01		IC RH80536GE0402MSL7SB	●		●	●	●						●	●	●	●											●																				
		6-707-260-01		IC RH80536GE0412MSL7SM											●	●	●	●				●					●								●	●	●	●											
		6-707-551-01		IC RH80536GE0472MSL9S0			●	●	●						●	●	●	●										●																					
		6-707-771-01		IC RH80536NC0171MSL86K			●	●	●						●	●	●	●																															
	329	1-761-564-51		WIRELESS LAN CARD							●	●	●		●	●	●		●	●																●					●								
		1-761-864-61		WIRELESS LAN CARD	●	●	●	●	●	●																																							
△ [MA]		1-761-864-71		WIRELESS LAN CARD																		●	●	●	●	●	●	●	●	●	●	●	●	●		●		●	●		●		●						●
	332	2-592-235-01		TAPE FERRITE SHORT							●	●	●	●	●	●	●	●	●	●	●	●	●	●	●	●	●	●	●	●	●	●	●	●	●	●	●	●	●	●	●	●	●	●	●	●	●	●	●	●
	335	2-580-413-01		GFX SPACER		●	●	●	●	●					●	●	●	●	●	●												●	●																
										△ [MA]								△ [MA]		△ [MA]	△ [MA]	△ [MA]	△ [MA]	△ [MA]	△ [MA]	△ [MA]	△ [MA]	△ [MA]	△ [MA]	△ [MA]	△ [MA]	△ [MA]	△ [MA]	△ [MA]	△ [MA]	△ [MA]	△ [MA]	△ [MA]	△ [MA]	△ [MA]	△ [MA]	△ [MA]	△ [MA]	△ [MA]	△ [MA]	△ [MA]	△ [MA]	△ [MA]	△ [MA]

- This parts list contains two different types of parts.
  The first type is the parts that are common to all models.
  The other type is the parts that are different depending on each model.

- この部品表は，機種共通の部品と，機種によって使い分けが必要な部品に分かれています。

- When change the CPU (ref. 316), refer to "Replacing the CPU" in CHAPTER 5.
- CPU（Ref. 316）を交換する際には，CHAPTER 5の「Replacing the CPU」をご参照下さい。

B-1. Bottom

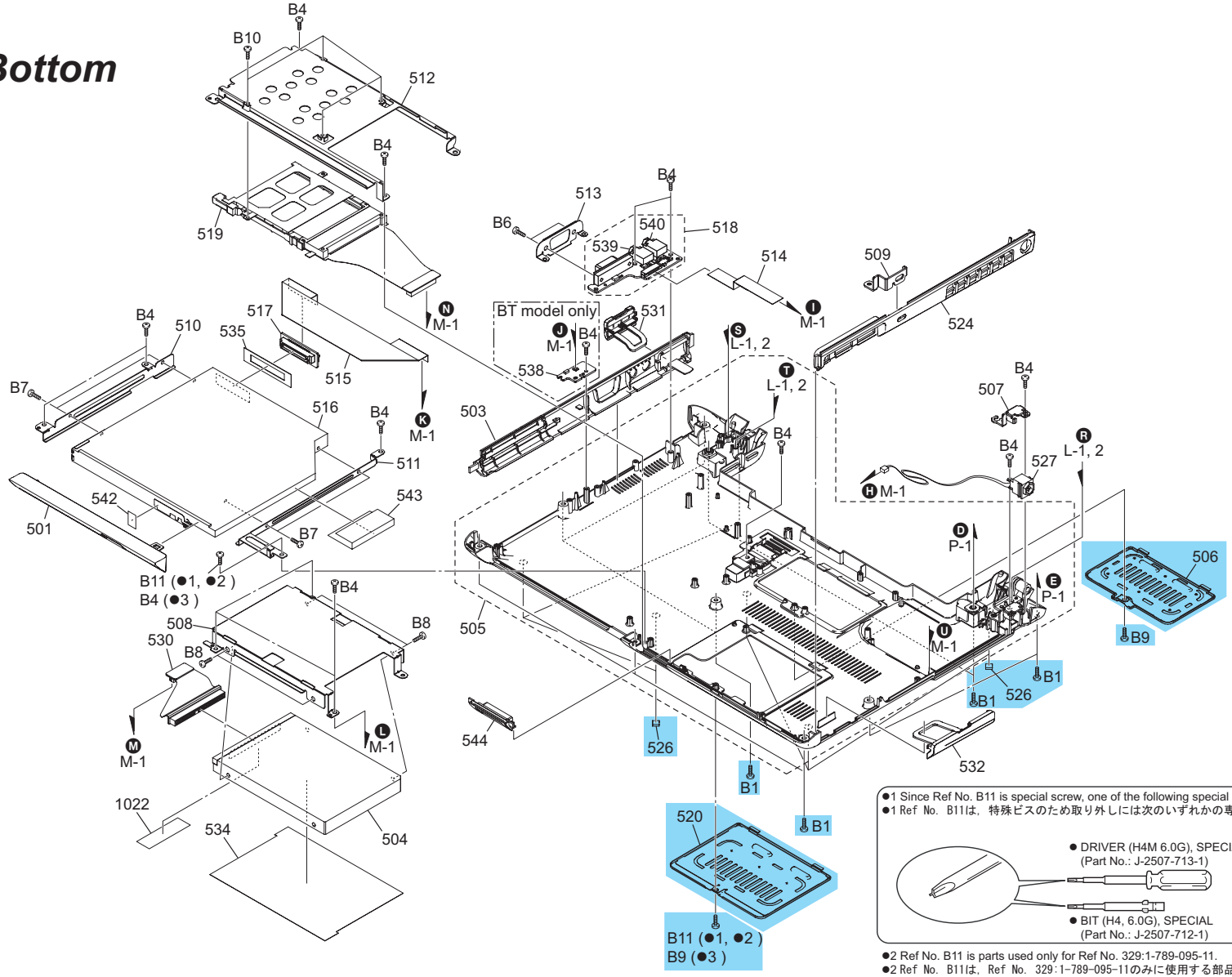

●1 Since Ref No. B11 is special screw, one of the following special tools is needed for removal.
●1 Ref No. B11は，特殊ビスのため取り外しには次のいずれかの専用工具が必要です。

● DRIVER (H4M 6.0G), SPECIAL
(Part No.: J-2507-713-1)

● BIT (H4, 6.0G), SPECIAL
(Part No.: J-2507-712-1)

●2 Ref No. B11 is parts used only for Ref No. 329:1-789-095-11.
●2 Ref No. B11は，Ref No. 329:1-789-095-11のみに使用する部品です。

●3 Ref No. B4 and B9 are parts used only for models are used for Ref No. 329:1-761-864-51,1-761-864-61,1-761-864-71.
●3 Ref No. B4，B9は，Ref No. 329:1-761-864-51,1-761-864-61,1-761-864-71を使用する機種のみに使用する部品です。

Sony Confidential

B-1. Bottom

Ref. No.	Part No.			Description
503	X-4626-768-2			ASSY ESCUTCHEON L
505	X-2048-427-4			ASSY HOUSING BOTTOM
506	X-2048-428-1		&	ASSY LID DIMM
507	2-024-006-01			BRACKET DC JACK
* 508	2-548-545-01			BRACKET HDD
* 509	4-683-190-01			BRACKET KENJINGTON
* 510	4-683-231-02			BRACKET OPT L
511	2-548-551-01			BRACKET OPT R
512	2-548-546-01			BRACKET PCCARD
513	4-683-192-01			BRACKET VGA
514	1-830-252-31			CABLE, FLEXIBLE FLAT (22PIN)
515	1-829-200-11			CABLE, FLEXIBLE FLAT (50PIN)
517	A-1124-113-A	$		COMPLETE PWB CNX299 (S)
518	A-1124-112-A	$		COMPLETE PWB CNX298 (S)
519	1-818-398-21			CONNECTOR, FPC WITH PC CARD
520	X-2048-429-1		&	ASSY LID WLAN
524	2-548-830-01			ESCUTCHEON R
526	4-683-197-01		&	FOOT
527	1-963-592-11			HARNESS,CONNECTOR WITH
530	1-830-171-11			CABLE, FLEXIBLE POLYIMIDE CABL
531	4-683-188-01			RUBBER DOOR MODEM
532	4-683-186-01			RUBBER DOOR USB
534	2-023-591-02			SHEET HDD
535	2-059-467-02			SHEET OPT
539	1-694-760-21			JACK, SMALL TYPE
540	1-694-760-41			JACK, SMALL TYPE
542	4-659-711-02			SHEET (BOSS)
543	2-178-741-01			SHEET 35X25
544	2-548-831-01			ESCUTCHEON MS
1022	-			FILAMENT TAPE 12X30
B1	4-672-834-71		&	SCREW, +B EG GRIP
B4	4-672-834-51			SCREW, +B EG GRIP
B6	4-674-716-01			SCREW (NO.4-40) (UNC)
B7	4-671-538-01			SCREW(M2X4), SPECIAL HEAD
B8	4-672-839-01			HEAD, M3 FLAT
B10	2-050-180-01			+SCREW,O2 +SPECIAL HEAD

	Ref.No.	Part No.			Description	J					AM									EU						AO																															
						S73PR/B	S53B/S	S93PS/S+	S93PSY+	S93S/S+	S63PZ/B	S460P/B	S470P/S	S460/B	S480+	S480P+	S480B+	S480BH+	S450P/S	S460F	S460P	S470P	S4VP/B	S4HP/B	S4HRP/B	S4M/S	S4XRP/B	S4Z/S	S46CP/B	S46CP/B	S46CP/B	S46C/B	S46CP/S	S46C/S	S46C/S	S46GP/B	S47LP/B	S47TP/B	S46GP/S	S46TP/S	S45SP/S	S45LP/S	S44TP/B	S43LP/S
	501	X-2024-607-1			ASSY BEZEL OPT COMBO			●	●	●	●			●	●	●	●	●	●		●									●	●	●	●	●												●	●
		X-2055-733-1			ASSY BEZEL OPT +R/W DL							●	●	●	●	●	●	●		●		●	●	●	●	●	●	●	●	●						●	●	●	●	●	●	●	●		
		X-2055-734-1			ASSY BEZEL OPT MLT DL	●	●	●	●	●																																											
	504	A-1105-612-A	$	#	HDD (100GB,HTS541010) (S)			●	●	●					●	●	●	●																																					
△ [MA]		A-1105-614-A	$	#	HDD (60GB,HTS541060) (S)																																			●															
		A-1108-510-A	$	#	HDD (MHT2080-80GB) (S)							●	●	●									●						●	●																									
		A-1108-909-A	$	#	HDD (MHT2080-60GB) (S)			●	●	●	●				●	●	●	●	●	●				●	●	●	●									●	●	●	●	●		●													
		A-1109-275-A	$	#	HDD (MHT2040-40GB) (S)											●	●	●			●										●		●		●																					
		A-1105-615-A	$	#	HDD (40GB,HTS541040) (S)				●	●	●																					●		●		●																		●	●
		A-1105-613-A	$	#	HDD (80GB,HTS541080) (S)	●			●	●	●				●	●	●	●									●																													
		A-1121-699-A	$	#	HDD (MK1032GSX-100GB) (S)				●	●	●				●	●	●	●				●						●																													
	516	1-797-054-11		#	COMBO DRIVE (UJDA765,9.5MM)				●	●	●				●	●	●	●	●		●										●	●	●	●	●														●	●
		1-797-272-11		#	DVD+-RW(UJ-832B,9.5MM)	●		●	●	●	●																																												
		1-797-272-11		#	DVD+-RW(UJ-832B,9.5MM)							●	●	●	●	●	●	●		●		●	●	●	●	●	●	●	●	●						●	●	●	●	●	●	●	●		
	538	A-1124-285-A	$		COMPLETE PWB IFX331 (-21) (S)										●	●	●	●				●	●	●					●	●	●	●	●	●	●						●	●				●	
	B9	4-673-648-01		&	GRIP, M2 (+B) (EG)	●	●	●	●	●	●	●	●	●	●	●	●	●	●	●	●	●	●	●	●	●	●	●	●	●	●	●	●	●	●	●	●	●	●	●	●	●	●	●	●	●	●	●	●	●	●	●	●
	B11	4-681-432-21		&	SCREW (M2) (SPIN)										●	●	●	●																																						
										△ [MA]								△ [MA]	△		△ [MA]	△ [MA]	△ [MA]	△ [MA]	△ [MA]	△ [MA]	△ [MA]	△ [MA]	△ [MA]	△ [MA]	△ [MA]	△ [MA]	△ [MA]	△ [MA]	△ [MA]	△ [MA]	△ [MA]	△ [MA]	△ [MA]	△ [MA]	△ [MA]	△ [MA]	△ [MA]	△ [MA]	△ [MA]	△ [MA]	△ [MA]	△ [MA]	△ [MA]	△ [MA]	△ [MA]	△ [MA]	△ [MA]	△ [MA]	△ [MA]	△ [MA]	△ [MA]

- This parts list contains two different types of parts.
  The first type is the parts that are common to all models.
  The other type is the parts that are different depending on each model.
- Ref No. B11 is parts used only for Ref No. 329:1-789-095-11.
- Ref No. B4 and B9 are parts used only for Ref No. 329:1-761-864-51,1-761-864-61,1-761-864-71.

- この部品表は，機種共通の部品と，機種によって使い分けが必要な部品に分かれています。
- Ref No. B11は，Ref No. 329:1-789-095-11のみに使用する部品です。
- Ref No. B4，B9は，Ref No. 329:1-761-864-51,1-761-864-61,1-761-864-71を使用する機種のみに使用する部品です。

L-1. LCD 13.3-inch WXGA (Brighter)
– Made by TO –

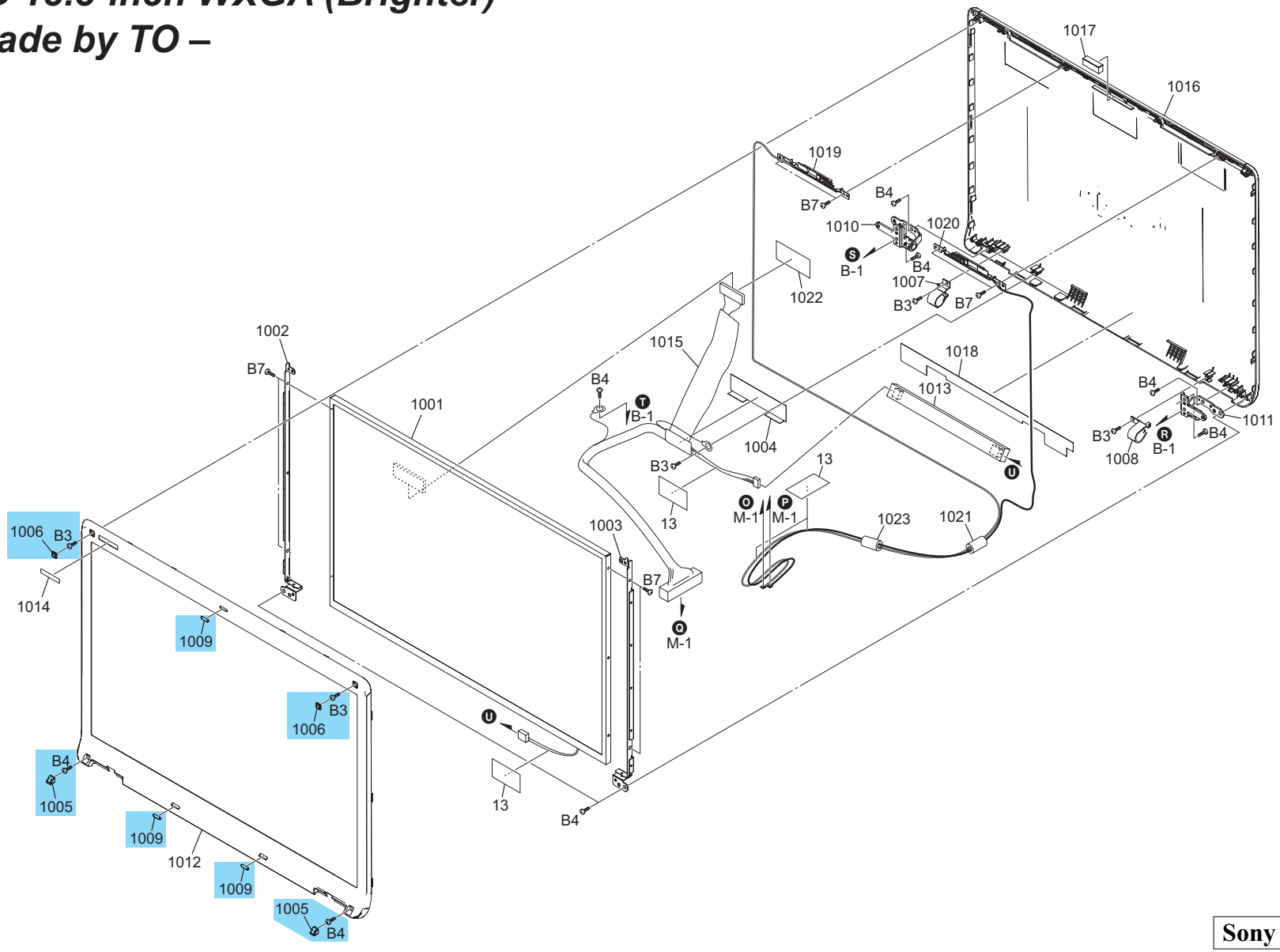

L-1. LCD 13.3-inch WXGA (Brighter) – Made by TO –

Ref. No.	Part No.			Description
13	4-662-881-02			CUSHION, KEY BOARD
1001	A-1072-481-A	$	#	LCD UNIT(13.3 WXGA) (S)
* 1002	4-683-218-01			BRACKET LCD L
* 1003	4-683-219-01			BRACKET LCD R
1004	4-673-031-01			COPPER TAPE(LCD)
1010	4-683-225-02			HINGE L
1011	4-683-226-02			HINGE R
1013	1-478-924-31			INVERTER UNIT
1015	1-963-526-11			LCD HARNESS
1017	2-024-668-01			MAGNET (LID)
1018	2-067-394-01			SHEET CABLE WLL
1019	1-754-331-22			ANTENNA (2.4/5GHZ FOR LEFT)
1020	1-754-331-12			ANTENNA (2.4/5GHZ FOR RIGHT)
1022	-			FILAMENT TAPE 12X30
B3	4-672-836-01		<&>	SCREW, M2 SPECIAL HEAD,EG GRIP
B4	4-672-834-51		<&>	SCREW, +B EG GRIP
B7	4-671-538-01			SCREW(M2X4), SPECIAL HEAD

					J				AM			AO													
	Ref.No.	Part No.		Description	S73PB/B	S53B/S	S63PS/S+	S93PSY+	S93S/S+	S460P/B	S470P/S	S460/B	S480BH+	S49CP/B	S48CP/B	S46CP/S	S46GP/B	S46C/B	S46C/S	S45CP/S	S46CP/S	S46GP/B	S48TP/B	S47LP/B	S46GP/S	S46TP/S	S45LP/S	S44TP/B	S43LP/S
	1005	4-683-220-01	&	COVER DISPLAY SCREW LO	●					●		●	●	●	●	●		●				●	●	●				●	
		4-683-220-11	&	COVER DISPLAY SCREW LO		●	●	●	●		●						●		●	●	●				●	●	●		●
	1006	4-683-221-01	&	COVER DISPLAY SCREW UP	●					●		●	●	●	●	●		●				●	●	●				●	
		4-683-221-11	&	COVER DISPLAY SCREW UP		●	●	●	●		●						●		●	●	●				●	●	●		●
	1007	4-683-222-01		COVER HINGE L	●					●		●	●	●	●	●		●				●	●	●				●	
		4-683-222-11		COVER HINGE L		●	●	●	●		●						●		●	●	●				●	●	●		●
	1008	4-683-223-03		COVER HINGE R	●					●		●	●	●	●	●		●				●	●	●				●	
		4-683-223-12		COVER HINGE R		●	●	●	●		●						●		●	●	●				●	●	●		●
	1009	4-683-224-01	&	CUSHION BEZEL	●					●		●	●	●	●	●		●				●	●	●				●	
		4-683-224-11	&	CUSHION BEZEL		●	●	●	●		●						●		●	●	●				●	●	●		●
	1012	4-683-217-03		HOUSING BEZEL	●					●		●	●	●	●	●		●				●	●	●				●	
		4-683-217-11		HOUSING BEZEL		●	●	●	●		●						●		●	●	●				●	●	●		●
⚠ [MA]	1014	2-630-747-01		LABEL ID (C)										●															
⚠ [MA]		2-630-747-11		LABEL ID (C)											●														
⚠ [MA]		2-630-747-21		LABEL ID (C)												●													
⚠ [MA]		2-630-747-31		LABEL ID (C)													●												
⚠ [MA]		2-630-747-41		LABEL ID (C)														●											
⚠ [MA]		2-630-747-51		LABEL ID (C)															●										
⚠ [MA]		2-630-747-61		LABEL ID (C)														●											
⚠ [MA]		2-630-747-71		LABEL ID (C)															●										
⚠ [MA]		2-629-251-01		LABEL ID (I BLACK)																		●							
⚠ [MA]		2-629-251-11		LABEL ID (I BLACK)																			●						
⚠ [MA]		2-629-251-31		LABEL ID (I BLACK)																				●					
⚠ [MA]		2-629-251-41		LABEL ID (I BLACK)																								●	
⚠ [MA]		2-629-252-01		LABEL ID (I SILVER)																					●				
⚠ [MA]		2-629-252-11		LABEL ID (I SILVER)																						●			
⚠ [MA]		2-629-252-31		LABEL ID (I SILVER)																							●		
⚠ [MA]		2-629-252-41		LABEL ID (I SILVER)																									●
		2-598-357-01		LABEL ID (J)	●																								
		2-598-357-11		LABEL ID (J)		●																							
		2-598-329-01		LABEL ID (JCTO)			●																						
		2-598-329-11		LABEL ID (JCTO)				●																					
		2-598-329-21		LABEL ID (JCTO)					●																				
		2-598-485-01		LABEL ID (UD)						●																			
		2-598-485-11		LABEL ID (UD)							●																		
		2-598-485-31		LABEL ID (UD)								●																	
⚠ [MA]		2-598-563-31		LABEL ID (U)									●																
	1016	A-1101-121-A	$	ASSY DISPLAY(S)	●					●		●	●	●	●	●		●				●	●	●				●	
		A-1098-489-A	$	ASSY DISPLAY SILVER(S)		●	●	●	●		●						●		●	●	●				●	●	●		●
	1021	1-400-255-11		FERRITE CORE						●	●	●	●	●	●	●	●	●	●	●	●	●	●	●	●	●	●	●	●
	1023	1-500-863-11		FERRITE CORE						●	●	●	●	●	●	●	●	●	●	●	●	●	●	●	●	●	●	●	●
													⚠ [MA]	⚠ [MA]	⚠ [MA]	⚠ [MA]	⚠ [MA]	⚠ [MA]	⚠ [MA]	⚠ [MA]	⚠ [MA]	⚠ [MA]	⚠ [MA]	⚠ [MA]	⚠ [MA]	⚠ [MA]	⚠ [MA]	⚠ [MA]	⚠ [MA]	⚠ [MA]

- This parts list contains two different types of parts.
  The first type is the parts that are common to all models.
  The other type is the parts that are different depending on each model.

- この部品表は，機種共通の部品と，機種によって使い分けが必要な部品に分かれています。

L-2. LCD 13.3-inch WXGA (Brighter)
– Made by SH –

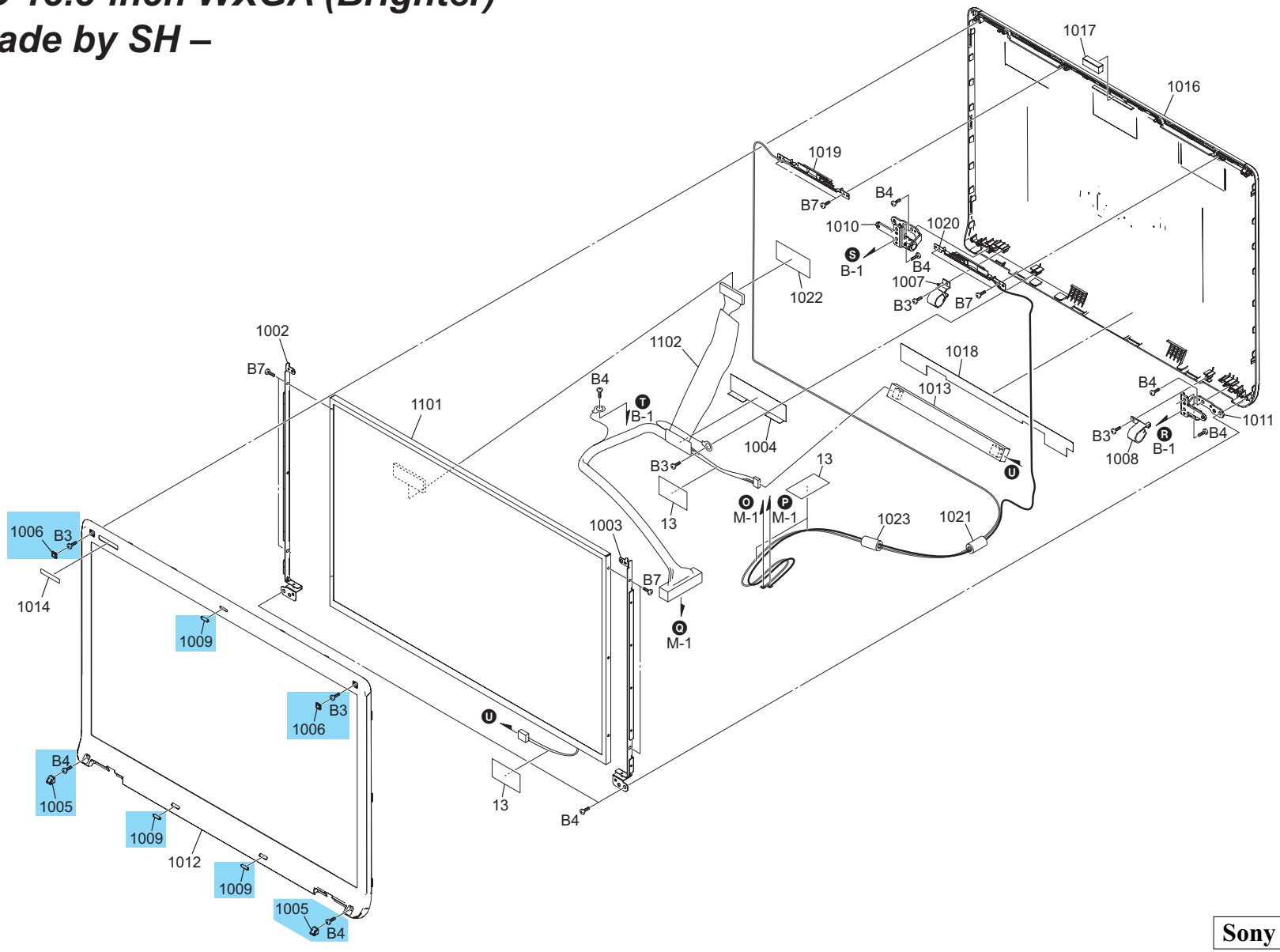

L-2. LCD 13.3-inch WXGA (Brighter) – Made by SH –

Ref. No.	Part No.			Description
13	4-662-881-02			CUSHION, KEY BOARD
* 1002	4-683-218-01			BRACKET LCD L
* 1003	4-683-219-01			BRACKET LCD R
1004	4-673-031-01			COPPER TAPE(LCD)
1010	4-683-225-02			HINGE L
1011	4-683-226-02			HINGE R
1013	1-478-924-31			INVERTER UNIT
1017	2-024-668-01			MAGNET (LID)
1018	2-067-394-01			SHEET CABLE WLL
1019	1-754-331-22			ANTENNA (2.4/5GHZ FOR LEFT)
1020	1-754-331-12			ANTENNA (2.4/5GHZ FOR RIGHT)
1022	-			FILAMENT TAPE 12X30
1101	A-1124-255-A	$	#	LCD UNIT (13.3 WXGA SH) BR (S)
1102	1-963-526-21			LCD HARNESS
B3	4-672-836-01		<&>	SCREW, M2 SPECIAL HEAD,EG GRIP
B4	4-672-834-51		<&>	SCREW, +B EG GRIP
B7	4-671-538-01			SCREW(M2X4), SPECIAL HEAD

					AM					EU						AO	
	Ref.No.	Part No.		Description	S48/b-	S48/Ob-	S48/Bb-	S430P/S	S460F	S460FP	S4XP/B	S4VP/B	S4HP/B	S4HRP/B	S4M/S	S4XRP/B	S4Z/S	S47SP/B	S46SP/S
	1005	4-683-220-01	&	COVER DISPLAY SCREW LO	●	●	●		●	●	●	●	●	●		●		●	
		4-683-220-11	&	COVER DISPLAY SCREW LO				●							●		●		●
	1006	4-683-221-01	&	COVER DISPLAY SCREW UP	●	●	●		●	●	●	●	●	●		●		●	
		4-683-221-11	&	COVER DISPLAY SCREW UP				●							●		●		●
	1007	4-683-222-01		COVER HINGE L	●	●	●		●	●	●	●	●	●		●		●	
		4-683-222-11		COVER HINGE L				●							●		●		●
	1008	4-683-223-03		COVER HINGE R	●	●	●		●	●	●	●	●	●		●		●	
		4-683-223-12		COVER HINGE R				●							●		●		●
	1009	4-683-224-01	&	CUSHION BEZEL	●	●	●		●	●	●	●	●	●		●		●	
		4-683-224-11	&	CUSHION BEZEL				●							●		●		●
	1012	4-683-217-03		HOUSING BEZEL	●	●	●		●	●	●	●	●	●		●		●	
		4-683-217-11		HOUSING BEZEL				●							●		●		●
△ [MA]	1014	2-598-528-01		LABEL ID (E)							●								
△ [MA]		2-598-528-11		LABEL ID (E)								●							
△ [MA]		2-598-528-21		LABEL ID (E)									●						
△ [MA]		2-598-528-31		LABEL ID (E)										●					
△ [MA]		2-598-528-41		LABEL ID (E)											●				
△ [MA]		2-598-528-51		LABEL ID (E)												●			
△ [MA]		2-598-528-61		LABEL ID (E)													●		
△ [MA]		2-598-291-21		LABEL ID (T BLACK)														●	
△ [MA]		2-598-292-21		LABEL ID (T PINK)															●
△ [MA]		2-598-487-01		LABEL ID (L)					●										
△ [MA]		2-598-487-11		LABEL ID (L)						●									
		2-598-563-01		LABEL ID (U)		●													
		2-598-563-11		LABEL ID (U)	●														
		2-598-565-21		LABEL ID (U)			●												
		2-598-495-31		LABEL ID (UD)				●											
	1016	A-1101-121-A	$	ASSY DISPLAY(S)	●	●	●		●	●	●	●	●	●		●		●	
		A-1099-489-A	$	ASSY DISPLAY SILVER(S)				●							●		●		●
	1021	1-400-255-11		FERRITE CORE	●	●	●	●	●	●	●	●	●	●	●	●	●	●	●
	1023	1-500-863-11		FERRITE CORE	●	●	●	●	●	●	●	●	●	●	●	●	●	●	●
											△ [MA]	△ [MA]	△ [MA]	△ [MA]	△ [MA]	△ [MA]	△ [MA]	△ [MA]	△ [MA]

- This parts list contains two different types of parts.
  The first type is the parts that are common to all models.
  The other type is the parts that are different depending on each model.

- この部品表は，機種共通の部品と，機種によって使い分けが必要な部品に分かれています。

L-3. LCD 13.3-inch WXGA

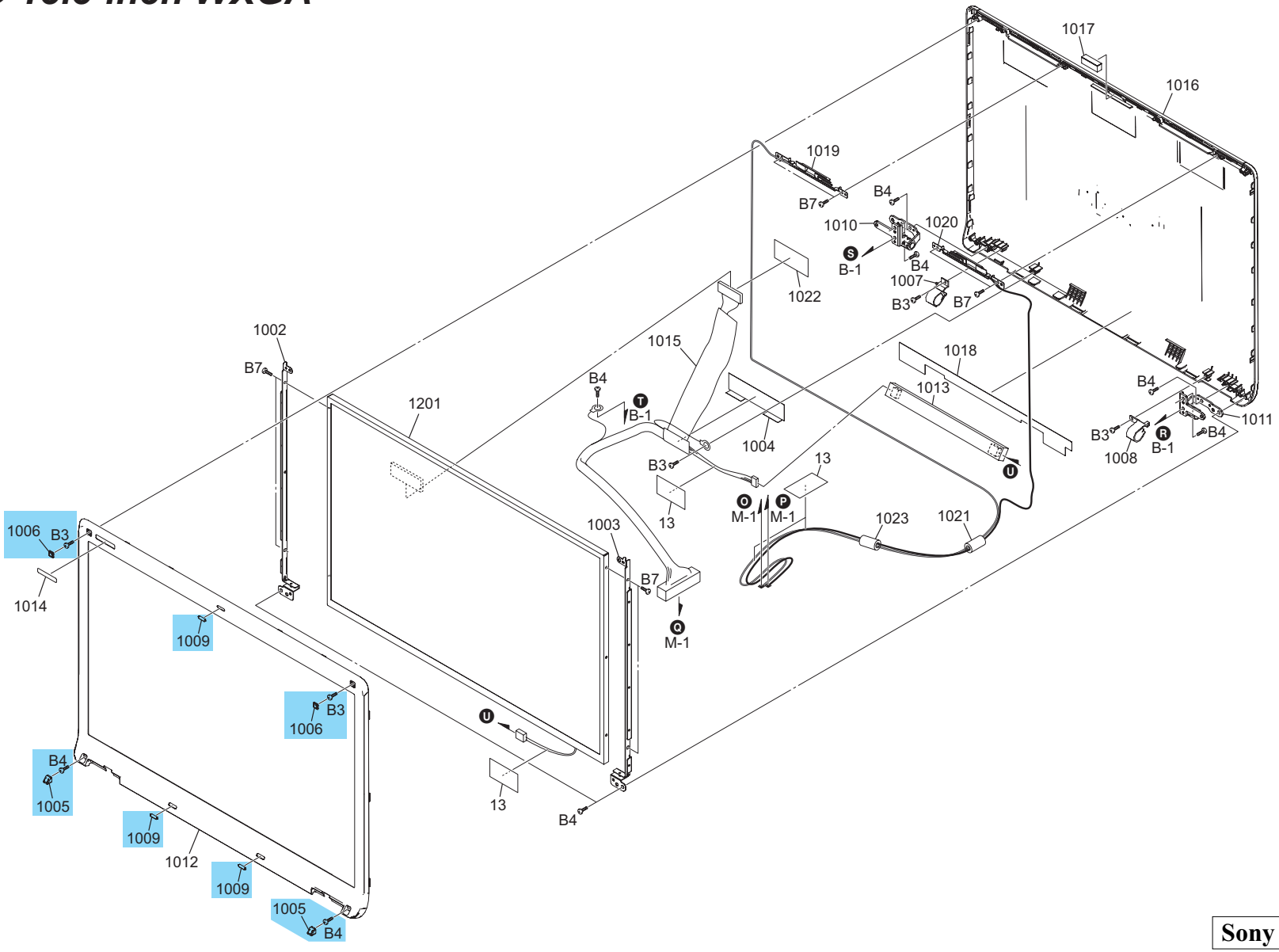

L-3. LCD 13.3-inch WXGA

Ref. No.	Part No.			Description
13	4-662-881-02			CUSHION, KEY BOARD
* 1002	4-683-218-01			BRACKET LCD L
* 1003	4-683-219-01			BRACKET LCD R
1004	4-673-031-01			COPPER TAPE(LCD)
1010	4-683-225-02			HINGE L
1011	4-683-226-02			HINGE R
1013	1-478-924-31			INVERTER UNIT
1015	1-963-526-11			LCD HARNESS
1017	2-024-668-01			MAGNET (LID)
1018	2-067-394-01			SHEET CABLE WLL
1019	1-754-331-22			ANTENNA (2.4/5GHZ FOR LEFT)
1020	1-754-331-12			ANTENNA (2.4/5GHZ FOR RIGHT)
1022	-			FILAMENT TAPE 12X30
1201	A-1072-480-A	$	#	LCD UNIT(13.3 WXGA) NML (S)
B3	4-672-836-01		<>	SCREW, M2 SPECIAL HEAD,EG GRIP
B4	4-672-834-51		<>	SCREW, +B EG GRIP
B7	4-671-538-01			SCREW(M2X4), SPECIAL HEAD

				J				AM			
Ref.No.	Part No.		Description	S93PS/S+	S93PSY+	S93S/S+	S63PZ/B	S480+	S480P+	S480B+	S480BH+
1005	4-683-220-01	&	COVER DISPLAY SCREW LO				●	●	●	●	●
	4-683-220-11	&	COVER DISPLAY SCREW LO	●	●	●					
1006	4-683-221-01	&	COVER DISPLAY SCREW UP				●	●	●	●	●
	4-683-221-11	&	COVER DISPLAY SCREW UP	●	●	●					
1007	4-683-222-01		COVER HINGE L				●	●	●	●	●
	4-683-222-11		COVER HINGE L	●	●	●					
1008	4-683-223-03		COVER HINGE R				●	●	●	●	●
	4-683-223-12		COVER HINGE R	●	●	●					
1009	4-683-224-01	&	CUSHION BEZEL				●	●	●	●	●
	4-683-224-11	&	CUSHION BEZEL	●	●	●					
1012	4-683-217-03		HOUSING BEZEL				●	●	●	●	●
	4-683-217-11		HOUSING BEZEL	●	●	●					
△ [MA] 1014	2-598-357-21		LABEL ID (J)				●				
	2-598-329-01		LABEL ID (JCTO)	●							
	2-598-329-11		LABEL ID (JCTO)			●					
	2-598-329-21		LABEL ID (JCTO)		●						
	2-598-563-01		LABEL ID (U)						●		
	2-598-563-11		LABEL ID (U)					●			
	2-598-563-21		LABEL ID (U)							●	
△ [MA]	2-598-563-31		LABEL ID (U)								●
1016	A-1101-121-A	$	ASSY DISPLAY(S)				●	●	●	●	●
	A-1099-489-A	$	ASSY DISPLAY SILVER(S)	●	●	●					
1021	1-400-255-11		FERRITE CORE					●	●	●	●
1023	1-500-863-11		FERRITE CORE					●	●	●	●
							△ [MA]				△ [MA]

- This parts list contains two different types of parts.
  The first type is the parts that are common to all models.
  The other type is the parts that are different depending on each model.

- この部品表は，機種共通の部品と，機種によって使い分けが必要な部品に分かれています。

A-1. Accessories

2001
AC Adaptor

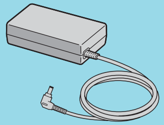

△1 [MA]
2009
Power-supply Cord

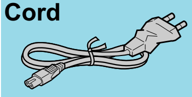

△1 [MA]
2015
Power Cord

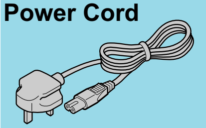

2003
Battery

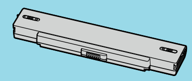

△5 [MA]
2011
Power-supply Cord

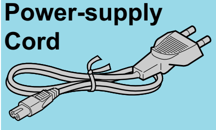

2016
Power Cord

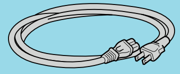

2004
L Battery

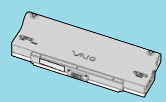

△1 [MA]
2012
Power-supply Cord

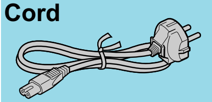

2017
~~Power Cord~~ ← △4 [CHG] **Power-supply Cord**

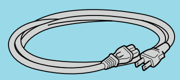

△2 [MA]
2006
Power Cord

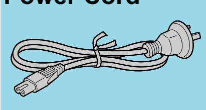

△2 [MA]
2013
Power-supply Cord Set

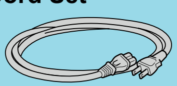

△2 [MA]
2018
Power Cord

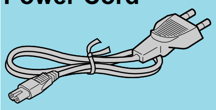

2007
Power Cord

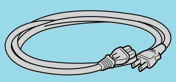

△2 [MA]
2014
Power Cord

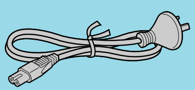

						J						AM										EU							AO																	
Rev.	Ref.No.	Part No.			Description	S73PB/B	S53B/S	S93PS/S*	S93PSY*	S93S/S*	S63PZ/B	S460P/B	S470P/S	S460/B	S480*	S480P*	S480B*	S480BH*	S430P/S	S460F	S450FP	S4XP/B	S4VP/B	S4HP/B	S4HRP/B	S4M/S	S4XRP/B	S4Z/S	S49CP/B	S48CP/B	S46CP/B	S46CP/S	S46C/B	S46C/S	S45CP/S	S45C/S	S48GP/B	S48TP/B	S47SP/B	S47LP/B	S46GP/S	S46TP/S	S45SP/S	S45LP/S	S44TP/B	S43LP/S
△4 [CHG]	~~⚠ 2001~~	~~1-479-114-23~~	~~$~~	~~&~~	~~ADAPTOR, AC~~							●	●	●	●	●	●		●																											
△1 [MA]	⚠ 2001	1-479-231-11	$	&	ADAPTOR, AC																				●		●																			
	⚠	1-479-116-21	$	&	AC ADAPTOR	●	●	●	●	●	●																																			
△1 [MA] (△4 [CHG])	⚠	1-479-114-31	$	&	ADAPTOR, AC							●	●	●	●	●	●	●	●	●	●	●	●	●		●		●	●	●	●	●	●	●	●	●	●	●	●	●	●	●	●	●	●	●
	⚠ 2003	A-1072-505-A	$	&	BATTERY PACK BPS2 (J) (S)	●	●	●	●	●	●																																			
	⚠	A-1072-506-A	$	&	BATTERY PACK BPS2 (U) (S)							●	●	●	●	●	●	●	●																											
	⚠	A-1072-507-A	$	&	BATTERY PACK BPS2 (E/I) (S)															●	●	●	●	●	●	●	●	●	●	●	●	●	●	●	●	●	●	●	●	●	●	●	●	●	●	●
	⚠ 2004	A-1072-508-A	$	&	BATTERY PACK BPL2 (J) (S)			●	●	●																																				
	⚠	A-1072-509-A	$	&	BATTERY PACK BPL2 (U) (S)										●	●	●	●																												
△2 [MA]	⚠ 2006	1-555-074-32		&	CORD, POWER																																●				●					
	⚠ 2007	1-829-237-21		&	CORD, POWER							●	●	●	●	●	●	●	●	●	●																									
△1 [MA]	⚠ 2009	1-827-481-21		&	POWER-SUPPLY CORD																	●	●	●		●													●				●			
△5 [MA]	⚠ 2011	1-823-947-32		&	POWER-SUPPLY CORD																																			●				●		●
△1 [MA]	⚠ 2012	1-830-375-11		&	POWER-SUPPLY CORD																				●		●																			
△2 [MA]	⚠ 2013	1-830-518-21		&	POWER-SUPPLY CORD SET																																	●				●			●	
△2 [MA]	⚠ 2014	1-827-945-21		&	CORD, POWER																																●									
△1 [MA]	⚠ 2015	1-827-946-31		&	CORD, POWER																	●	●	●		●		●																		
△2 [MA]	⚠ 2016	1-827-947-21		&	CORD, POWER																								●	●	●	●	●	●	●	●										
△4 [CHG]	⚠ 2017	1-827-160-21		&	POWER-SUPPLY CORD	●	●	●	●	●	●																																			
△2 [MA]	⚠ 2018	1-824-910-41		&	CORD, POWER																																●				●					
△1 [MA]	-	1-816-429-12			(UK)...PHONE PLUG (GB)																	●	●	●		●		●																		
	-	2-629-486-01		&	Instruction Manual (XP Professional,XP Home Edition)	●	●	●	●	●																																				
△3 [MA]	-	2-629-487-01		&	Instruction Manual (XP Professional)						●																																			
△1 [MA]	-	2-629-976-11			(UK/Swiss/Dutch/Belgium/Swedish/Portugal)...HW SPECS																	●	●	●		●		●																		
△1 [MA]	-	2-629-976-21			(Swiss/German)...HW SPECS																	●	●	●		●																				
△1 [MA]	-	2-629-976-31			(Swiss/French/Belgium)...HW SPECS																	●	●	●		●																				
△1 [MA]	-	2-629-976-41			(Italian)...HW SPECS																	●	●	●		●																				
△1 [MA]	-	2-629-976-51			(Swedish)...HW SPECS																	●		●		●																				
△1 [MA]	-	2-629-976-61			(Dutch/Belgium)...HW SPECS																			●																						
△1 [MA]	-	2-629-976-71			(Portugal)...HW SPECS																			●																						
△1 [MA]	-	2-629-976-81			(Swedish)...HW SPECS																			●																						
△1 [MA]	-	2-629-976-91			(Swedish)...HW SPECS																			●																						
△1 [MA]	-	2-629-977-11			(UK)...HW SPECS																			●																						
△1 [MA]	-	2-629-977-21			(UK)...HW SPECS																			●																						
△1 [MA]	-	2-629-978-11			(Russian)...HW SPECS																				●		●																			
△1 [MA]	-	2-584-870-01			TROUBLE GUIDE (D)																	●	●	●	●	●	●																			
△1 [MA]	-	2-584-870-11			TROUBLE GUIDE (D)																			●	●		●																			
△1 [MA]	-	2-584-871-11			RECOVERY GUIDE (D)																			●	●		●																			
△1 [MA]	-	2-634-933-01			(Russian)...REGULATORY BOOKLET RUS (JDS)																				●		●																			
△1 [MA]	-	2-632-233-01			REGULATORY BOOKLET(JDS)																	●	●	●	●	●	●																			
△2 [MA]	-	2-633-274-11			SAFETY/REGULATIONS GUIDE 1(D)																																●	●	●	●	●	●	●	●	●	●
△2 [MA]	-	2-633-274-21			SAFETY/REGULATIONS GUIDE 1(D)																								●	●	●	●	●	●	●	●										
△2 [MA]	-	2-629-243-11			SPEC SHEET																																●		●		●		●			
△5 [MA]	-	2-629-243-21			SPEC SHEET																																			●				●		●
△2 [MA]	-	2-629-243-31			SPEC SHEET																								●	●	●	●	●	●	●	●										
△2 [MA]	-	2-629-243-41			SPEC SHEET																																	●				●			●	
△2 [MA]	-	2-631-104-11			TROUBLESHOOTING GUIDE																																●		●		●		●			
△5 [MA]	-	2-631-104-21			TROUBLESHOOTING GUIDE																																			●				●		●
△2 [MA]	-	2-631-104-31			TROUBLESHOOTING GUIDE																								●	●	●	●	●	●	●	●										
△2 [MA]	-	2-631-104-41			TROUBLESHOOTING GUIDE																																	●				●			●	
	-	2-632-904-11			LEGAL SAFETY(U) (D)							●	●	●					●	●	●																									
	-	2-632-903-11			WELCOME MAT(U) (D)							●	●	●					●	●	●																									
△2 [MA]	-	2-631-664-01			EULA (TH) (JDS)																																		●				●			
△4 [ADD]	-	2-632-903-21			WELCOME MAT(U) (D)										●			●																												
△4 [ADD]	-	2-632-903-31			WELCOME MAT(U) (D)											●	●																													
△4 [ADD]	-	2-632-904-21			LEGAL SAFETY(U) (D)										●	●	●	●																												
											△3 [MA]							△6 [MA]		△1 [MA]	△1 [MA]	△1 [MA]	△1 [MA]	△1 [MA]	△1 [MA]	△1 [MA]	△1 [MA]	△5 [MA]	△2 [MA]	△2 [MA]	△2 [MA]	△2 [MA]	△2 [MA]	△2 [MA]	△2 [MA]	△2 [MA]	△2 [MA]	△2 [MA]	△2 [MA]	△5 [MA]	△2 [MA]	△2 [MA]	△2 [MA]	△5 [MA]	△3 [MA]	△5 [MA]

- This parts list contains two different types of parts.
  The first type is the parts that are common to all models.
  The other type is the parts that are different depending on each model.

- この部品表は，機種共通の部品と，機種によって使い分けが必要な部品に分かれています。

Sony Confidential

VGN-S53B/S63PZ/S73PB/S93PS/S93PSY/S93S (J)
VGN-S430P/S450FP/S460/S460F/S460P/S470P/S480/S480B/S480BH/S480P (AM)
VGN-S4HP/S4HRP/S4M/S4VP/S4XP/S4XRP/S4Z (EU)
VGN-S43LP/S44TP/S45C/S45CP/S45LP/S45SP/S46C/S46CP/S46GP/S46TP/S47LP/S47SP/S48CP/S48GP/S48TP/S49CP (AO)

CHAPTER 5.
OTHER

5-1. The Barcode Label

The hatched portion of the barcode is used as the repair data.

バーコードラベルの網掛け部は，修理データとして使用いたします。

[MBX-129 Board]
(Side A)

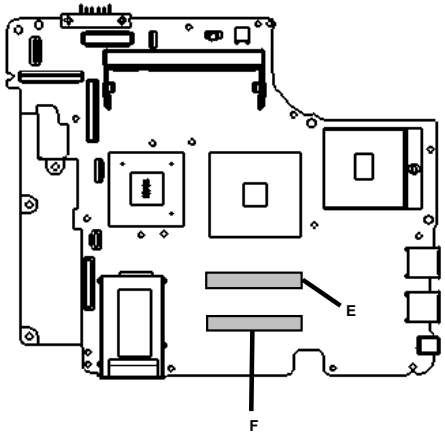

[MBX-129 Board]
(Side B)

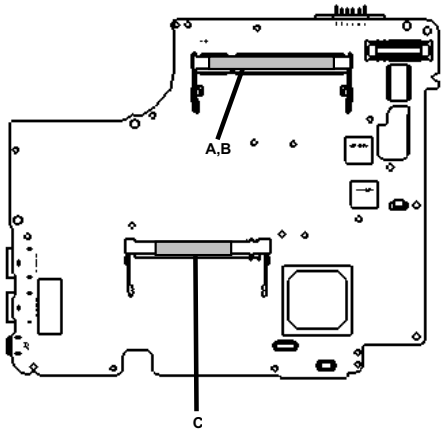

[Drive]
(Rear)

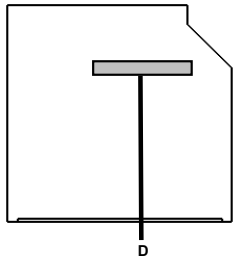

[HDD (FUJITSU)]
(Top)

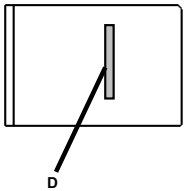

[W-LAN Card]
(Top)

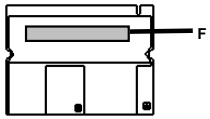

[HDD (HITACHI)]
(Top)

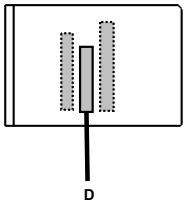

[LCD Unit]
(Rear)

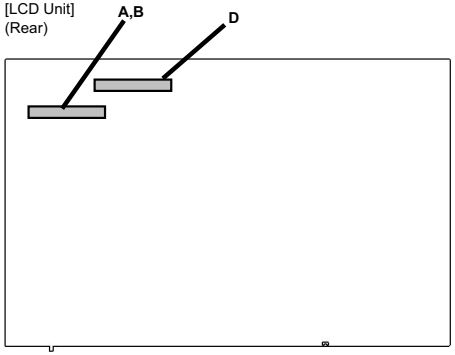

[Keyboard Unit]
(Rear)

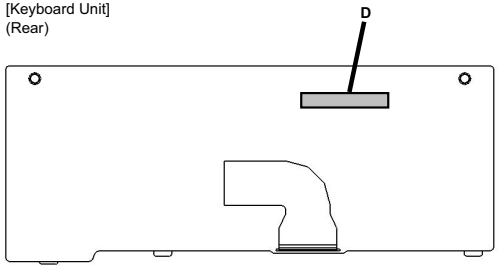

[W-LAN Card]
(Rear)

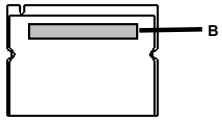

[MODEM Card]
(Rear)

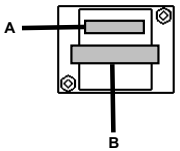

[Memory]
(Top)

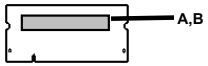

A : Part No.
B : Serial No.
C : Revision No.
D : Maker Barcode
E : Global User ID (iLink)
F : Mac Address

Sony Confidential

5-2. Replacing the CPU

Note: We have two kinds of CPU for this set, and either of them is used.
Two kinds of CPU have differences in the lock position and the unlock position.

1. Socket configuration 1

1. How to remove the CPU

① Rotate the lock with a flat-blade screwdriver toward the unlock position shown in the figure.
② Remove up the CPU.

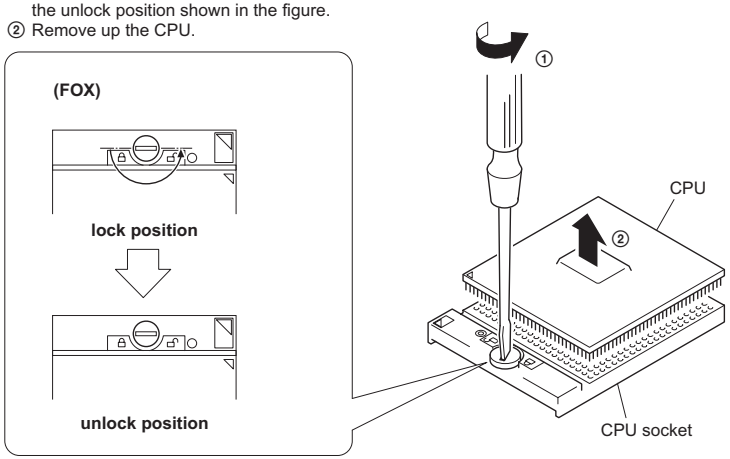

2. How to install the CPU

① Position the mark on the CPU to the mark on the CPU socket and put in all pins to the holes on the CPU socket.
② Pressing two corners marked with ◯ in the figure, rotate the lock with a flat-blade screwdriver toward the lock position.

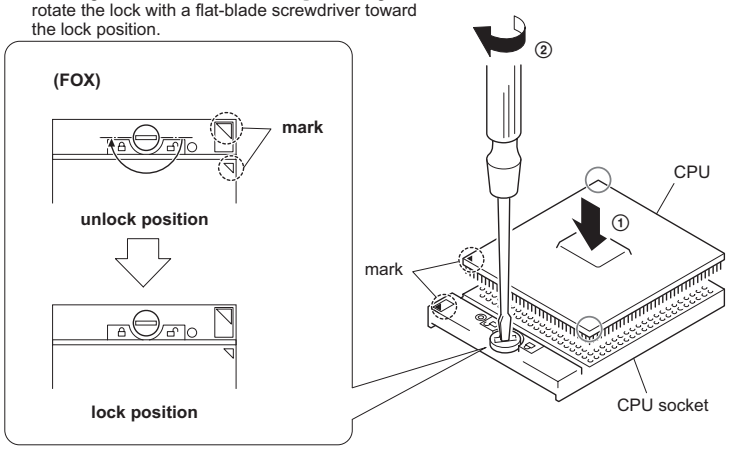

Note: Lock the CPU properly, or operation becomes unstable.

2. Socket configuration 2

1. How to remove the CPU

① Rotate the lock with a flat-blade screwdriver toward the unlock position shown in the figure.
② Remove up the CPU.

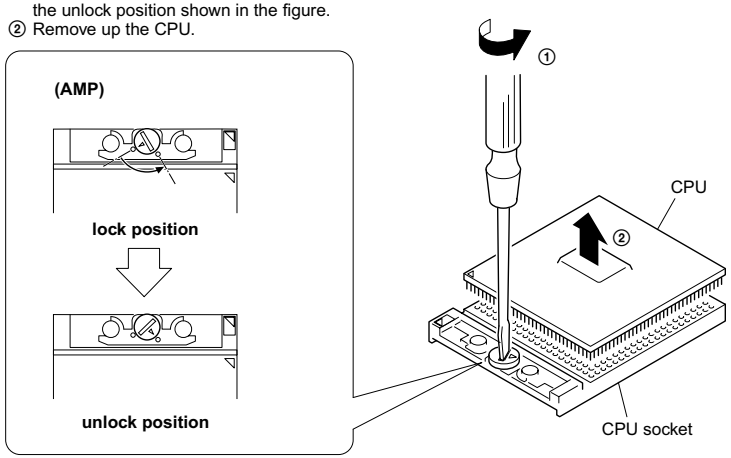

2. How to install the CPU

① Position the mark on the CPU to the mark on the CPU socket and put in all pins to the holes on the CPU socket.
② Pressing two corners marked with ◯ in the figure, rotate the lock with a flat-blade screwdriver toward the lock position.

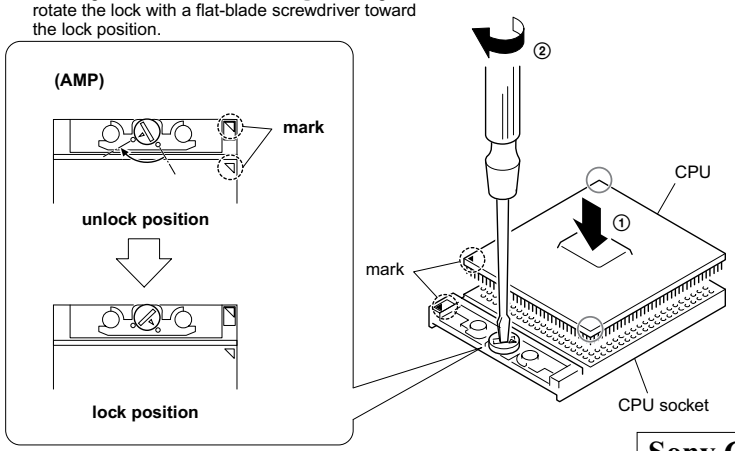

Note: Lock the CPU properly, or operation becomes unstable.

Sony Confidential

List of VGN-S Series (As of November, 2005)

Service Manual Part No.	Model Name			
	J	AM	EU	AO
9-876-369-XX	VGN-S50B VGN-S70B VGN-S90PS* VGN-S90S*	VGN-S150 VGN-S150F VGN-S150FP VGN-S150P VGN-S170* VGN-S170B* VGN-S170F VGN-S170P*	VGN-S1HP VGN-S1VP VGN-S1XP	VGN-S16C VGN-S16GP VGN-S16LP VGN-S16SP VGN-S16TP VGN-S17C VGN-S18CP VGN-S18GP VGN-S18LP VGN-S18SP VGN-S18TP
9-876-391-XX	VGN-S51B VGN-S61PZ VGN-S71PB VGN-S91PS* VGN-S91S*	VGN-S240P VGN-S250F VGN-S250FP VGN-S260 VGN-S260P VGN-S270* VGN-S270B* VGN-S270F VGN-S270P*	VGN-S2HP VGN-S2HRP VGN-S2VP VGN-S2XP VGN-S2XRP	VGN-S25C VGN-S26C VGN-S26GP VGN-S26LP VGN-S26SP VGN-S26TP VGN-S27C VGN-S28CP VGN-S28GP VGN-S28LP VGN-S28SP VGN-S28TP
9-876-402-XX	VGN-S52B/S VGN-S62PS/S* VGN-S62PSY* VGN-S62S/S*	VGN-S350F VGN-S350FP VGN-S360 VGN-S360P VGN-S370F		VGN-S36GP/S VGN-S36LP/S VGN-S36SP/S VGN-S36TP/S VGN-S37C/B VGN-S38CP/B
9-876-403-XX	VGN-S72PB/B VGN-S92PS/S* VGN-S92PSY* VGN-S92S/S*	VGN-S380* VGN-S380B* VGN-S380P*	VGN-S3HP VGN-S3VP VGN-S3XP	VGN-S38GP/B VGN-S38LP/B VGN-S38SP/B VGN-S38TP/B
9-876-417-XX	VGN-S53B/S VGN-S63PZ/B VGN-S73PB/B VGN-S93PS/S* VGN-S93PSY* VGN-S93S/S*	VGN-S430P/S VGN-S450FP VGN-S460/B VGN-S460F VGN-S460P/B VGN-S470P/S VGN-S480* VGN-S480B* VGN-S480BH* ☜ VGN-S480P*	VGN-S4HP/B VGN-S4HRP/B VGN-S4M/S VGN-S4VP/B VGN-S4XP/B VGN-S4XRP/B VGN-S4Z/S	VGN-S43LP/S VGN-S44TP/B VGN-S45C/S VGN-S45CP/S VGN-S45LP/S VGN-S45SP/S VGN-S46C/B VGN-S46C/S VGN-S46CP/B VGN-S46CP/S VGN-S46GP/S VGN-S46TP/S VGN-S47LP/B VGN-S47SP/B VGN-S48CP/B VGN-S48GP/B VGN-S48TP/B VGN-S49CP/B

* : CTO Model
☜ : Additional Models

This manual and the constituent data may not be replicated, copied nor reprinted in whole or in part without prior written authorization of Sony Corporation.

本マニュアルの一部，または全部について，無断でデータの複製，複写，転載することを禁じます。

9-876-417-07

English/Japanese
2005K0500-1
© 2005 Sony Corporation
Published by Sony Corporation VBD VAIO-GS Division

Revision History

Suffix	Ver.	Date	Contents	QM No.
-01	Ver. 1	2005.04.20	First Edition	
-02	Ver. 2	2005.05.20	△1 Front Page (Model Lineup), Page 1-1 to 1-2, Page 4-1, Page 4-3, Page 4-5, Page 4-7, Page 4-11, Page 4-14, Back Cover	N2005_006AK
-03	Ver. 3	2005.06.02	△2 Front Page (Model Lineup), Page 1-2, Page 4-1 to 4-3, Page 4-5, Page 4-7, Page 4-9, Page 4-11, Page 4-14, Back Cover	N2005_014AK
-04	Ver. 4	2005.06.16	△3 Front Page (Model Lineup), Page 1-1 to 1-2, Page 4-1, Page 4-3, Page 4-5, Page 4-7, Page 4-9, Page 4-13 to 4-14, Back Cover	N2005_026AK
-05	Ver. 5	2005.07.04	△4 Page 4-3, Page 4-14	N2005_032CK
-06	Ver. 6	2005.07.14	△5 Front Page (Model Lineup), Page 1-2, Page 4-1, Page 4-3, Page 4-5, Page 4-7, Page 4-9, Page 4-11, Page 4-14, Back Cover	N2005_041AK
-07	Ver. 7	2005.11.07	△6 Front Page (Model Lineup), Page 1-1, Page 4-1, Page 4-3, Page 4-5, Page 4-7, Page 4-9, Page 4-13 to 4-14, Back Cover	N2005_066AK

<Remarks>